CHENNAI METRO RAIL LIMITED

Chennai
Metro Rail
Limited

TWO BID SYSTEMS

VOLUME – I- TECHNICAL BID

and

VOLUME – II- PRICE BID

NIT No. **CMRL/CON/SAL-FOB-RT-02/2017**

NAME OF WORK: Construction of Foot Over Bridge (FOB) with escalator and lifts at Alandur CMRL Metro Station and across GST Road at Km 12/6 of G.S.T Road including various utility shifting works.

General Manager (Tracks & Elevated)
Chennai Metro Rail Limited

(THIS TENDER DOCUMENT IS NOT TRANSFERABLE)

Volume - I

(TECHNICAL BID)

Table of Contents

3.4 Application Information Sheet

3.5 Joint Venture Information Sheet (Details of Partner Other than Lead Partner

3.6 Financial Statement (Data for Previous Three Years - In IRS)

3.7 Total Annual Turnover

3.8 Present Activities in which Bidder Firm Is Engaged as Lead Partner.

3.9 Present Activities in which Bidder Firm is working in Joint Venture

3.10 Present Activities in, which Bidder Firm is working as Partner

3.11 Completed Works in which Firm was the Lead Partner

3.12 Completed Works in which Firm was in Joint Venture

3.13 Details of Sub Contractor and their Responsibilities

Definitions & Interpretations

SECTION I

INVITATION FOR BID

(IFB)

CHENNAI METRO RAIL LIMITED
CHENNAI-600 107
NIT No. Tender No. CMRL/CON/SAL-FOB/RT-02/2017
RE-TENDER

CMRL invites sealed Open Tender under two cover (Technical & Financial) system for the works as detailed below:

1	***Name of work***	**Tender No. CMRL/CON/SAL-FOB/-RT-02/2017** "Construction of Foot over Bridge with escalator and lifts at Two Locations at Alandur CMRL metro Station and across GST Road at Km 12/6 of G.S.T Road including various utility shifting works".
2	***Approximate cost of works***	**INR 6.8 Cr. (Rupees Six Crore Eighty Lakhs only)**
3	***Tender Security Amount (EMD)***	INR 8,84,000/- (Rupees Eight Lakhs Eighty Four Thousand only).
4	***Tender validity***	120 Days from Date of Submission of tender
5	***Validity of Tender Security Amount***	28 Days beyond Tender validity period (148 days from date of submission)
6	***Duration of Contract (Completion period of the work)***	08 Months
7	***Tender Documents on sale***	From 12.09.2017 to 11.10.2017 Between (10.00 Hrs to 17.30 Hrs) on working days
8	***Cost of Tender Documents (Non-refundable)***	1. The Tender documents can be downloaded from the internet, if so desired (see below for website details). There will be a non-refundable Tender submission fee of *Rs.24,000/-(Rupees Twenty Four thousand only)* including GST in the form of Demand Draft in favour of **Chennai Metro Rail Limited** payable at Chennai to be submitted along with bid. 2. A hard copy of the complete tender documents is available on payment of non-refundable fee of *Rs.30,000/-(Rupees Thirty thousand only)* including GST from CMRL office in the form of Demand Draft in favour of **Chennai Metro Rail Limited** payable at Chennai.
9	***Pre-bid Meeting***	21.09.2017 at 11:00 hours in the CMRL Conference Room *Address:* *Chennai Metro Rail Limited, Administrative Building, CMRL Depot, Poonamallee High Road, Koyambedu, Chennai 600 107* *Tel No.044-2379 2346* Email id: jgmec.cmrl@tn.gov.in
10	***Last Date of issuing addendum for pre- bid***	27.09.2017
11	***Date and Time of submission of Tender***	12.10.2017 up to 14:00 hrs at office of the JGM/EC, CMRL, Address as mentioned in item No.09 above
12	***Date and Time of opening of Tender (At the place of submission)***	12.10.2017 at 14:30 hrs
13	***Authority and place of purchase of Tender Documents***	JGM (EC), CMRL, Address as mentioned in item No.09 above
14	***Bidders barred from bidding for this work***	Those who are single or JV under suspension, debarred, backlisted by GOI, GOTN,PSU's, Metro Rail Corporations, CMRL or whose contracts were terminated as on date of submissions of bid are ineligible to apply for this tender work.
15	***Website from which Tender Documents and any additional information can be downloaded***	www.chennaimetrorail.org

General Manager
(Track & Elevated)

Signature of Bidder

CHENNAI METRO RAIL LIMITED
CHENNAI-600 107,INDIA

NIT No. Tender No. CMRL/CON/SAL-FOB-RT-02/2017
RE-TENDER

Tender No. CMRL/CON/SAL-FOB-RT-02/2017

"Construction of Foot over Bridge with escalator and lifts at Two Locations at Alandur CMRL metro Station and across GST Road at Km 12/6 of G.S.T Road including various utility shifting works".

Please refer CMRL website www.chennaimetrorail.org for particulars.

General Manager
(Track & Elevated)

Check List

Bidder shall check the submission of relevant details and documents as mandated in the tender document, before submission of bids.

S No	Description	Tenderer's Performance
1	Clause No 15.0 of (ITB) **Tender Security Amount (Earnest Money Deposit) of INR 8,84,000/- (Rupees Eight Lakhs Eighty Four Thousand only).**is enclosed? The Tender Security Amount (Earnest Money Deposit) shall be either in the form of Demand Draft or an irrevocable Bank Guarantee drawn from any Public Sector Bank in favor of **Chennai Metro Rail Limited** payable at Chennai.	
2	Clause No 3.4 (a) (i) Whether copy of Certificate of registration as Class I contractor (monitory limit above Rs.75.00 lakhs) in any of the Central Government of India/ State Government Dept./ Govt. undertaking in India is enclosed?	
3	Clause No 3.2 (b) Total monetary value of construction work performed for each of the last five years	
4	ClauseNo.3.2(k) Whether proof for having achieved a minimum Average Annual Turnover during the last 3 years ending 31st March of the previous financial year (2013 - 2014, 2014 - 2015, 2015 - 2016) in the Civil Engineering construction field should be at least of **Rs.210 Lakhs (30% of the estimated cost)** is enclosed. Year: 2015 - 2016 — Multiplying Factor: 1.00 Year: 2014 – 2015 — Multiplying Factor: 1.10 Year: 2013 – 2014 — Multiplying Factor: 1.21	
5	Clause No 3.2 (c). Whether proof for Tender Experience of having successfully completed similar works during last 5 years (2011-2012, 2012 - 2013, 2013 - 2014, 2014 - 2015, 2015 - 2016) for Centre Government of India / State Government Department / Government undertaking in India	

S No	Description	Tenderer's Performance
	should be either of the following: a). Three similar completed works costing not less than the amount equal to 40% of the estimated cost. b). Two similar completed works costing not less than the amount equal to 50% of the estimated cost. c). One similar completed works costing not less than the amount equal to 80% of the estimated cost. Is enclosed? ""Similar Work" means similar work defined as similar works shall be foot over bridge or bridges or flyovers on highways/arterial roads/railway crossings or grade separators.	
	Year / Multiplying Factor 2015 - 2016 / 1.00 2014 – 2015 / 1.10 2013 – 2014 / 1.21 2012 - 2013 / 1.33 2011 - 2012 / 1.46	
6	Clause No 3.2 (c) Similar Nature of work should also include the following Minimum Quantities of work at least any one year during the last five years. (i) RCC (M25) - 110 cum (ii) Steel Reinforcement - 130 MT	
7	Clause No 3.2 (d) & 3.4 (b) Equipment Capabilities. (i) Minimum requirement of plants and equipments. RMC Transit Mixer – 1 No's Welding Machine – 3 No's Dewatering Pumps – 1 No's Hydraulic Earth movers – 1 No's Dumper – 1 No's Excavators – 1 No's Lifting Crane – 1 No's Mixer Machine - 1 No's Needle Vibrating Machine – 2 No's Concrete Plant (Optional) - 1 No's	

S No	Description	Tenderer's Performance
	(ii) Adequate Steel Strutting Materials and Site laboratory and equipments. Total Stations, leveling instrument, Hydraulic Compression testing machine.	
	(iii) Tenderer should give an undertaking that the above equipment's will be purchased/ hired for the project.	
8	Clause No.3.2 (e) 3.4 (C) Technical Personnel Required	
	1. One Project Coordinator with B.E. (Civil) with Minimum 10 years' Experience in Structural steel works.	
	2. One Site Engineer with B.E. (Civil) with Minimum 5 years' Experience in Structural steel erection works.	
	3. One Electrical Engineer with DCE (Electrical) Minimum 5 years' Experience in building and commercial works.	
	4. One Site Supervisor / Surveyor with DCE (Civil) Minimum 5 years' Experience	
	Consent letter and attested copy of degree / diploma certificate and experience to be attached.	
9	Clause No. 3.2 (g) Financial Position Liquid Assets/ Credit Facilities	
	10% of the Work Value Tenderer should attach attested copy of Bank Guarantee. (i.e.) Rs.302.13 Lakhs	
10	Clause No. 3.2 (f) Audited Balance Sheet for the Last Five Years Attested copies to be attached.	
11	Clause No.3.2 (i) LITIGATION HISTORY Forms - 8, 9 & 10 should fill up in Rs.20/- stamp paper signed by notary public and attached.	
12	Clause No.3.4 (f) Bid Capacity > value of the works	
	Bid Capacity = A x N x 1.5 - B	
	A = Maximum Value of Construction work executed in any one year during the last 5 years.	
	B = Existing Commitments and on going works to be completed during the next two years.	

S No	Description	Tenderer's Performance
	N = No. of Years for completion of the work.	

This Check List is only illustrative and not exhaustive. Hence the bidder is requested to go through the entire document and submit all relevant documents and details.

NOTE:

1. Copies of the documentary evidence to be furnished in support of the prequalification requirements should be submitted with due attestation by the competent authority.

2. The tenderers should furnish the original documents when called for at the time of tender evaluation to verify the copies of documentary evidence furnished along with the pre-qualification documents.

3. The audited balance sheet /profit and loss account etc., to be furnished by the tenderer should be properly endorsed by the auditors as verified with reference to the particulars furnished by the individual and found to be correct.

Section II

Instruction to bidders (ITB)

INSTRUCTIONS TO BIDDERS (ITB)

A. General

1. Scope of Bid

1.1 The Chennai Metro Rail Limited (CMRL) invites bids for the construction of works as described in the Bid Data Sheet. The name and identification number of the Contract is provided in the Contract Data.

1.2 The successful Bidder will be expected to complete the works by the completion date stipulated in the Contract Data.

2. Eligible Bidders

2.1 A Bidder shall be any Person, Company, Corporate body, Association, Body of individuals, Group of persons, Limited company, Firm, Organization either single or joint venture from India who are legally competent and entitled for entering into contract as per the law of contract prevailing in India. The Joint venture of Indian and foreign firms are permitted for externally funded Projects like World Bank, ADB etc.

2.1.1 In the case of a Joint venture/ Consortium/ Group bidding:

2.1.1.1 There shall be a Lead Bidder. A Lead Bidder shall submit only one bid for the work. He shall not be a member in any other Consortium or joint venture for the same work. There shall be a joint venture or consortium or group agreement executed between the parties exclusively for the project and which shall be legally enforceable by way of attesting by a notary. This agreement shall be submitted along with the Bid.

2.1.1.2 All partners shall be jointly and severely liable for carrying out the work under the contract.

2.1.1.3 The Lead Bidder shall be designated in the Joint venture/ Consortium/ Group agreement to be submitted along with the Bid. The Lead Bidder shall have the authority to conduct all business for and to act on behalf of any and all partners of the Joint venture/ Consortium/ Group, during the bidding process and in the event the contract is awarded.

2.1.1.4 The Lead Bidder shall be responsible for the submission of Bid and complete information required as per the described format, pertaining to each firm in the Joint venture/ Consortium/ Group and completion of contract documents and to furnish evidences admissible as per law. The Lead Bidder shall clearly identify the responsibility of other members of Joint venture/ Consortium/ Group.

2.1.1.5 The Bid documents can be purchased by any one of the prospective members of a Consortium/ Joint venture/ Group but shall be signed by the

Lead Bidder as specified in the Joint venture/ Consortium/ Group agreement which also forms the part of the Bid document.

2.2 The Contractors having registration in the class specified in the tender notice and above in the concerned Department of Chennai Metro Rail Limited, or intending Tenderer should be a registered contractor in any of the Centre / State Government Department / Government undertaking are eligible to participate in the Tender. Provisional Registration shall be done for the successful bidder if he is willing to abide by the rules and regulations of Chennai Metro Rail Limited and on payment of prescribed fees.

2.3 Bidders shall not be under a declaration of ineligibility for corrupt and fraudulent practices in accordance with sub-clause 31.1.

2.4 A Bidder shall not have a conflict of interest. All Bidders found to have a conflict of interest shall be disqualified. A Bidder may be considered to have a conflict of interest with one or more parties in this bidding process, if:

(a) They or their sister concern have controlling shareholders in common; or

(b) They or their sister concern receive or have received any direct or indirect subsidy from any of them; or

(c) They or their sister concern have the same legal representative for purposes of this bid; or

(d) They or their sister concern have a relationship with each other, directly or through common third parties, that puts them in a position to have access to information about or influence on the Bid of another Bidder, or influence the decisions of the General Manager (Tracks & Elevated) regarding this bidding process; or

(e) A Bidder or their sister concern participates in more than one bid for the same package in this bidding process. Participation by a Bidder in more than one Bid for the same package will result in the disqualification of all Bids in which the party is involved. However, this does not limit the inclusion of the same subcontractor in more than one bid; or

(f) A Bidder or their sister concern participated as a consultant in the preparation of the design or technical specifications of the contract that is the subject of the Bid.

2.5 No one or non-of a firm or company is eligible to participate in the tender if any one of his or any one or more of the director's of a firm or company is a blood relative of any one of an employee or a public representative of Chennai Metro Rail Limited.

3 Qualification of the Bidder

3.1 All Bidders shall provide in Section 3, a preliminary description of the proposed work method and schedule, as necessary.

3.2 All Bidders shall include the following information and documents with their bids in the prescribed format as per Section 3, unless otherwise stated in the Bid Data sheet:

(a) Copies of original documents defining the constitution or legal status, place of registration, and principal place of business, written power of attorney of the signatory of the Bid to commit the Bidder;

(b) Total monetary value of construction work performed for each of the last five years;

(c) Tenderer should have the experience in similar work and should have executed at least one work costing more than the amount specified in the Bid Data sheet during last five years.

(d) Major items of construction equipment proposed to carry out the Contract;

(e) Qualifications and experience of key site management and technical personnel proposed for the Contract;

(f) Reports on the financial standing of the Bidder, such as profit and loss statements and auditor's reports for the past five years;

(g) Evidence of adequacy of working capital for this Contract (access to line (s) of credit and availability of other financial resources);

(h) Authority to seek references from the Bidder's bankers;

(i) Information regarding any litigation, current or during the last five years, in which the Bidder is involved, the parties concerned, and disputed amount; and

(j) Proposals for subcontracting components of the works amounting to more than 10 % of the Contract Price.

k) The Bidder should have turnover not less than that specified in the Bid Data Sheet

3.3 Bids submitted by a Joint venture of two or more firms as partners shall comply with the following requirements, unless otherwise stated in the Bid Data Sheet:

(a) The Bid shall include all the information listed in Sub-Clause 3.2 above for each joint venture partner

(b) If the Bidder is a joint Venture undertaking / Consortium / Group, all the parties need not sign the bid document provided that a Joint Venture/ Consortium / Group agreement, and power of attorney for the person to sign is submitted along with the Bid. The date of signature shall be provided wherever stated

(c) The Bid by a partnership firm shall contain the full names and addresses of all partners. It shall be signed in the name of the partnership firm by one of the

members of the partnership authorized for the purpose or by an authorized representative followed by the name and designation of the person signing.

(d) Copy of the constitution of firm/ partnership with the name of partners duly attested by a Notary public and the instrument authorizing the persons to sign on behalf of the firm shall be furnished.

(e) All partners shall be jointly and severally liable for the execution of the Contract in accordance with the Contract terms.

3.4 To qualify for award of the Contract, Bidders shall meet the following minimum qualifying criteria:

(a) The Bidder shall have an annual turnover of not less than that specified in the Bid Data Sheet. In case of Joint venture, all partners combined shall meet the requirement. The lead partner shall have an annual turnover of not less than 40% of the required turnover The other partners shall have an annual turnover not less than 25% of the required turnover **at-least in two financial years of the last 5 financial years**

(b) Proposals for the timely acquisition (own, lease, hire etc) of the essential equipment listed in the Bid Data sheet.

(c) The Bidder should have the minimum Key Personnel as specified in the Bid Data sheet.

(d) Liquid asset and/or credit facilities, net of other contractual commitments and exclusive of any advance payment which may be made under the contract, of not less than the amount specified in the Bid Data sheet.

(e) The following enhancement factors shall be used for the costs of works executed and the financial figures to a common base value for works completed in India.

Multiplying factor

Current Year 1 - 1.00
Year 2 - 1.10
Year 3 - 1.21
Year 4 - 1.33
Year 5 - 1.46

The application will indicate actual figures of costs and amounts in the schedule without accounting for the above-mentioned factors.

Note: Current year means the year assessment year (i.e.). The completed year immediately preceding the date month and year in which notice inviting tenders for prequalification is published.

(f) Bid Capacity

The applicant who meets the minimum qualification criteria will be qualified only if their available bid capacity at the expected time of bidding is more *than the total estimated value of the works*. The available bid capacity will be calculated specified in the Bid Data sheet.

4. One Bid per Bidder

4.1 Each Bidder shall submit only one Bid, either individually or as a partner in a Joint venture. A Bidder who submits or participates in more than one Bid (other than as a subcontractor or in cases of alternatives that have been permitted or requested) will cause all the proposals with the Bidder's participation to be disqualified.

5. Cost of Bidding

5.1 The Bidder shall bear all costs associated with the preparation and submission of his Bid, and the General Manager (Tracks & Elevated)will in no case be responsible or liable for those costs.

6. Site Visit

6.1 The Bidder, at the Bidder's own responsibility and risk, is encouraged to visit and examine the site of works and its surroundings and obtain all information that may be necessary for preparing the Bid and entering into a contract for construction of the works. The costs of visiting the site shall be at the Bidder's own expense.

B. Bidding Documents

7. Content of Bidding Documents

7.1 The set of bidding documents comprises the documents listed in the table below and addenda issued in accordance with Clause 9:

Section I	Invitation for Bid (IFB)
Section II	Instructions to Bidders (ITB)
Section III	Forms of Bid and Qualification Information
Section IV	Letter of Acceptance
Section V	Conditions of Contract
Section VI	Contract Data
Section VII	General Technical Specifications
Section VIII	Schedule of Rates and Approximate quantities
Section IX	Security Forms
Section X	Technical Specification for Bridges
Section XI	Bill of Quantity

7.2 The number of copies of each section supplied to the prospective Bidder and the number of copies to be completed and returned with the Bid is specified in the Bid Data Sheet.

8. Clarification

8.1 In any case any Bidder ask for a clarification to the Bid documents before 10 days of the opening of the Bid, the Bid inviting authority shall ensure that a reply is posted on line to the clarifications sought. It is the responsibility of the Tenderer to note down any changes which are posted on line, the Tender Inviting Authority will not be held responsible in this matter.

9. Amendment of Bidding Documents

9.1 At any time after the issue of the Bid documents and 5 days before the opening of the Bid, the Bid inviting authority may make any changes, modifications or amendments to the Bid documents and shall send intimation of such change to all those who have purchased the original Bid documents. Prospective bidders shall promptly acknowledge the receipt thereof by telex, cable or fax to the Bidding authority. The Bid shall be furnished taking into account the addendum/ amendments, if any, issued as mentioned above and any failure in doing so will lead to consequences including rejection of Bid.

C. Preparation of Bids

10. Language of Bid

10.1 All documents relating to the Bid shall be in the language specified in the General Conditions of Contract.

11. Documents Comprising the Bid

11.1 The Bid submitted by the Bidder shall comprise the following:

(a) The Bid

(b) Bid Security;

(c) Priced Bill of Quantities;

(d) Qualification Information Form and Documents;

(e) Income Tax clearance certificate and Sales Tax clearance certificate for the current year obtained from the appropriate authority and any other materials required to be completed and submitted by bidders, as specified in the Bid Data sheet.

11.2 Alternate design

(a) Unless otherwise specified in the design data sheet, alternate design shall not be considered.

(b) Bidders wishing to offer technical alternatives to the requirement of the bidding document must first price the employer's design as described in the bidding document and shall further provide all information necessary for a complete evaluation of the alternative by the Employer including drawings, design, calculations, technical specifications, breakdown of prices and proposed construction methodology and other relevant details. Only technical alternatives if any, of the lowest evaluated bidder confirming to basic technical requirement shall be considered by the employees.

(c) Bidders are permitted to submit alternative technical solutions for specified parts of the projects identified in the bid data sheet.

12. Bid Prices

12.1 The Contract shall be for the whole works based on the priced Bill of Quantities submitted by the Bidder ***as per Schedule-A and for utility shifting as per schedule-B.*** However bidder will quote only for schedule-A and schedule-B will be paid as per the schedule of rates of concerned departments as indicated in schedule-B

12.2 The approximate cost of works indicated in the NIT, Sl. No.2, is inclusive of utility shifting charges.

12.3 All duties, GST/taxes, and other levies payable by the Contractor under the Contract, or for any other cause shall be included in the rates, prices, and total Bid price submitted by the Bidder.

12.4 The rates and prices quoted by the Bidder shall be subject to adjustment during the performance of the Contract if provided for in the Bid Data sheet and the provisions of the Conditions of Contract. The Bidder shall submit with the Bid all the information required under the Contract Data Sheet and the Conditions of Contract.

12.5 If the contractor offers discount / rebate in a particular item, his bid price will be after deducting the discount from the original quoted price. If the contractor offers discount / rebate in the total value of work, his bid price will be same as original quoted rate, after calculating the total amount the discount / rebate amount is to be deducted.

12.6 **The bidder is to quote prices only in BoQ items mentioned in *Schedule-A* and it is to be noted that bidder is not required to quote prices in *Schedule-B*.**

13. Currency

13.1 The currency for the purpose of the Bid document shall be the Indian Rupee (INR).

14. Bid Validity

14.1 Bids shall remain valid for a period as specified in the Bid Data sheet.

14.2 In exceptional circumstances, the General Manager (Tracks & Elevated)may request that the Bidders to extend the period of validity for a specified additional period. The request and the Bidders' responses shall be made in writing. A Bidder may refuse the request without forfeiting the Bid Security. A Bidder agreeing to the request will not be required or permitted to otherwise modify the Bid, but will be required to extend the validity of Bid Security for the period of the extension, and in compliance with Clause 15 in all respects.

15. Bid Security (Earnest Money Deposit)

15.1 The Bidder shall furnish, as part of the Bid, a Bid Security (Earnest Money Deposit) for an amount equal **INR 8,84,000/- (Rupees Eight Lakhs Eighty Four Thousand only**)The Earnest Money Deposit shall be either in the form of Demand Draft or an irrevocable bank Guarantee drawn from any Public Sector Bank in favor of Chennai

Metro Rail Limited payable at Chennai, to the credit of deposits which do not bear interest. The Earnest Money will be refunded to the unsuccessful bidder without interest on application after intimation is sent of the rejection of the tender or at the expiration of Bid validity period. Bids not accompanied by the Bid Security will be rejected. The Bid security of the successful Bidder will be returned as per clause 15.2.

15.2 The Bid Security of the successful Bidder will be discharged when the Bidder has signed the Agreement and furnished the required Performance Security.

15.3 The Bid Security will be forfeited:

(a) If a bidder withdraws his Bid during the period of Bid validity.

(b) If a successful Bidder fails to:

i) Execute the agreement or

ii) Furnish the necessary performance security within the specified time limit of 30 days from the date of issue of letter of acceptance of his bid.

(c) If the Bidder does not accept the correction of the Bid price, pursuant to Clause 24; or

(d) in the case of a successful Bidder, if the Bidder fails within the specified time limit to

i) Sign the Agreement; or

ii) Furnish the required Performance Security.

16. Format and Signing of Bid

16.1 The Bidder shall prepare one original of the documents comprising the Bid as described in Clause 11 of these Instructions to Bidders, bound with the volume containing the Form of Bid, and clearly marked “ORIGINAL.” In addition, the Bidder shall submit copies of the Bid, in the number specified in the Bidding Data, and clearly marked as “COPIES.” In the event of discrepancy between them, the original shall prevail.

16.2 The original and all copies of the Bid shall be typed or written in indelible ink and shall be signed by a person or persons duly authorized to sign on behalf of the Bidder, pursuant to Sub-Clauses 3.2 (a) or 3.3 (b), as the case may be. All pages of the Bid where entries or amendments have been made shall be initialed by the person or persons signing the Bid.

16.3 The Bid shall contain no alterations or additions, except those to comply with instructions issued by the Employer, or as necessary to correct errors made by the Bidder, in which case such corrections shall be initiated by the person or persons signing the Bid.

D. Submission of Bids

17. Sealing and Marking of Bids

17.1 The Bid shall be submitted in 2 parts simultaneously, addressing the Bid authority and each part shall be in separate sealed covers super scribing cover No, Bid No, Name of work, list of enclosures, name and address of Bidder. The Bidders shall then put the two sealed envelopes into an outer envelope, sealed, addressing the Bid authority, super scribing the name of work, list of enclosures, name and address of the Bidder.

Cover No.1 - Technical Bid (Volume I)

Earnest Money Deposit, Certificates as per clause 11.1 (e) and Prequalification Bid (volume I)

This cover should be marked as 'Cover number – 1, Technical Bid (Volume I)', and shall contain, Earnest Money Deposit and Pre- Qualification documents (Volume I). Tender document furnished by Chennai Metro Rail Limited to be submitted in cover.no.1

Cover No.2 – Price Bid (Volume II)

This cover should be marked as 'Cover number - 2, Price Bid (Volume II)', and should contain the Price Bid documents (Volume II).

17.2 The Bidder shall be responsible for properly super scribing and sealing the cover in which the Bid is submitted and Bid inviting authority shall not be responsible for accidental / misplacement/premature opening of the covers that are not properly super scribed and sealed as mentioned in Clause 17.1 before the time appointed for Bid opening.

17.3 The filled-up Bid documents shall be submitted up to the last date of submission as given in Bid Data sheet. Duly filled in Bid documents shall be put in the Tender box provided at the Tender Sales Counter, Chennai Metro Rail Limited, Admin Building, CMRL Depot, Poonamallee High Road, Koyambedu, Chennai –600107, Tamil Nadu. Tenders can also be submitted by Post or Courier, provided that the Bid inviting authority shall not be responsible for any delay in transit in such cases.

17.4 The Bid inviting authority may extend the last date of receiving tenders after giving adequate notice to all intending bidders in cases where

a) The publication of the IFB has been delayed

b) The communication of changes, in the Bid document to the prospective Bidders under the clause 8 took time.

17.5 The Bidders shall not amend/ add/ alter any of the Bid conditions, conditions of contract, specifications etc. of his own.

18. Deadline for Submission of Bids

18.1 Bids shall be delivered to the tender box provided at the Tender Sales Counter, Chennai Metro Rail Limited, Admin Building, CMRL Depot, Poonamallee High Road, Koyambedu, Chennai –600107, Tamil Nadu or by post to the Tender Inviting Authority to the address specified in the Bid Data Sheet not later than the time and date specified in the Bid Data sheet.

18.2 The Tender Inviting Authority may extend the deadline for submission of bids by issuing an amendment in accordance with Clause 9, in which case all rights and obligations of the Employer and the Bidders previously subject to the original deadline will then be subject to the new deadline.

19. Late Bids

19.1 Any Bid received by the Tender Inviting Authority after the deadline prescribed in Clause 18.1 will be returned unopened to the Bidder.

E. Bid Opening and Evaluation

20. Bid Opening

20.1 The Pre-Qualification Bid marked as Cover no. 1 will be opened at the time and date outlined in the Bid Data sheet, in the presence of Bidders/ authorized representatives who choose to attend. The Bidders' names, and the presence or absence of Bid Security, and such other details as the Tender Inviting Authority may consider appropriate, will be announced by the Tender Inviting Authority at the opening.

20.2 The Price Bid marked as Cover no. 2 of qualified Bidders will be opened by the Tender Inviting Authority, in the presence of Bidders / authorized representatives who choose to attend. The date of opening of the price bid will be intimated to all the Prequalified Bidders after evaluation of the Pre-Qualification Bids by the Tender Inviting Authority.

20.3 The Bidders' names, the Bid prices, the total amount of each Bid and such other details as the Tender Inviting Authority may consider appropriate, will be announced by the General Manager (Tracks & Elevated)at the opening.

20.4 The Employer will prepare minutes of the Prequalification and Price Bid opening, including the information disclosed to those present in accordance with Sub - Clause 20.1 & 20.3.

21. Process to Be Confidential

21.1 Information relating to the examination, clarification, evaluation, and comparison of Bids and recommendations for the award of a contract shall not be disclosed to Bidders or any other persons not officially concerned with such process until the award to the successful Bidder has been announced. Any effort by a Bidder to influence the Employer's processing of Bids or award decisions may result in the rejection of his Bid.

22. Clarification of Bids and Contacting the Employer

22.1 From the time of Bid opening to the time of contract award, if any Bidder wishes to contact the Employer on any matter related to the Bid, it should do so in writing.

22.2 To assist in the examination, evaluation, and comparison of Bids, the Employer may, at the Employer's discretion, ask any Bidder for clarification of the Bidder's Bid, including breakdowns of unit rates. The request for clarification and the response shall be in writing or by cable, telex, or facsimile, but no change in the

price or substance of the Bid shall be sought, offered, or permitted except as required to confirm the correction of arithmetic errors discovered by the Employer in the evaluation of the Bids in accordance with Clause 24.

22.3 Any effort by the Bidder to influence the Tender Inviting Authority in the Employer's Bid evaluation, Bid comparison or contract award decisions may result in the rejection of the Bidders' Bid.

23. Examination of Bids and Determination of Responsiveness

23.1 Prior to the detailed evaluation of Bids, the Employer will determine whether each Bid

(a) Meets the eligibility criteria defined in Clause 2;

(b) Has been properly signed;

(c) Is accompanied by the required securities; and

(d) Is substantially responsive to the requirements of the Bidding documents.

23.2 A substantially responsive Bid is one which conforms to all the terms, conditions, and specifications of the Bidding documents, without material deviation or reservation. A material deviation or reservation is one

(a) Which affects in any substantial way the scope, quality, or performance of the works;

(b) Which limits in any substantial way, inconsistent with the bidding documents, the Employer's rights or the Bidder's obligations under the Contract; or

(c) Whose rectification would affect unfairly the competitive position of other bidders presenting substantially responsive Bids.

23.3 If a Bid is not substantially responsive, it will be rejected by the Employer, and may not subsequently be made responsive by correction or withdrawal of the nonconforming deviation or reservation.

24. Correction of Errors

24.1 Bids determined to be substantially responsive will be checked by the Employer for any arithmetic errors. Errors will be corrected by the Employer as follows:

(a) Where there is a discrepancy between the price quoted in figures and in words, the lowest will be taken.

24.2 The amount stated in the Bid will be adjusted by the Employer in accordance with the above procedure for the correction of errors and, with the concurrence of the Bidder, shall be considered as binding upon the Bidder. If the Bidder does not accept the corrected amount, the Bid will be rejected, and the Bid Security may be forfeited in accordance with Sub-Clause 15.3 (c).

25. Evaluation and Comparison of Bids

25.1 The Employer will evaluate and compare only the bids determined to be substantially responsive in accordance with Clause 23.

25.2 In evaluating the bids, the Employer will determine for each Bid the evaluated Bid price by adjusting the Bid price by making any correction for errors pursuant to Clause 24.

25.3 ***Evaluation of the bid prices will be made entirely on rates quoted in Schedule-A only.***

Evaluation Criteria		
Sl. No.	***Schedule***	***Amount (in INR)***
1	Price quoted in schedule A	***To be quoted by the bidder***
2	Price as per schedule B	**2,00,00,000/-**
3	Goods & Service Tax	***To be quoted by the bidder***
4	Total including Taxes	***To be quoted by the bidder***

Note: *Bidder has to fill the* ***Summary Sheet for Bid Prices*** *attached after price Schedule-B.*

F. Award of Contract

26. Award Criteria

26.1 Subject to Clause 27, the Employer will award the Contract to the Bidder whose Bid has been determined to be substantially responsive to the bidding documents and who has offered the lowest evaluated Bid price, provided that such Bidder has been determined to be

(a) Eligible in accordance with the provisions of Clause 2, and

(b) Qualified in accordance with the provisions of Clause 3.

26.2 In determining the lowest evaluated price the following practice will be considered:

i) The quoted price shall be corrected for arithmetical errors

ii) In case of discrepancy between prices quoted in words and in figures, whichever is minimum will be taken.

27. Rates to Include The tendered rates for the items should be inclusive of all items of works required for the proper execution of the items (viz) watering, barricading, lighting, watching, safety arrangements in the interest of traffic, safeguarding the underground services etc, and no claim for extra payment on any score will be entertained. The rates to be tendered should be inclusive of Goods and Service Tax and other taxes in force. 1-28 Preliminary specification etc, in CPWD/DSR/CMWSSB/TNEB/HW/BSNL will form part of the Agreement.

28. Employer's Right to Accept any Bid and to Reject any or all Bids

(1) After negotiation with the tenderer and before passing the order accepting a tender as under sub-section (6) of section 10 of the Tamil Nadu Transparency in Tender Act, 1998 if the Tender Accepting Authority decides that the price quoted by such tenderer is higher by the percentage as may be prescribed over the schedule of rates or prevailing market price, he shall reject the Tender.

(2) The Tender Accepting Authority, before passing the order accepting a tender, may also reject all the tenders for reasons such as changes in the scope of procurement, new technologies or substantial design changes, lack of anticipated financial resources, Court orders, accidents or calamities and other unforeseen circumstances.

29. Notification of Award and Signing of Agreement

29.1 The Bidder whose Bid has been accepted will be notified of the award by the General Manager (Tracks & Elevated)prior to expiration of the Bid validity period by cable, telex, or facsimile confirmed by registered letter. This letter (hereinafter and in the Conditions of Contract called the “Letter of Acceptance”) will state the sum that the General Manager (Tracks & Elevated)will pay the Contractor in consideration of the execution, completion, and maintenance of the Works by the Contractor as prescribed by the Contract (hereinafter and in the Contract called the “Contract Price”).

29.2 The notification of award will constitute the formation of the Contract, subject to the Bidder furnishing the Performance Security in accordance with Clause 30 and signing the Agreement in accordance with Sub-Clause 29.3.

29.3 The bidder shall have to enter into an agreement with the General Manager (Tracks & Elevated)within 30 days from the date of receipt of letter of acceptance. The form of agreement will have to be stamped at the stamp office at the cost of the bidder.

29.4 Upon the furnishing by the successful Bidder of the Performance Security, the General Manager (Tracks & Elevated)will promptly notify the other bidders that their bids have been unsuccessful.

30. Performance Security (Security Deposit)

30.1 Within 14 days after receipt of the Letter of Acceptance, the successful Bidder shall deliver to the Director (Projects), a Performance Security. The Performance Security (Security Deposit) will be **7.5 %** of the contract amount from any Nationalized/ Scheduled PSU Bank in favour of **Chennai Metro Rail Limited** payable at Chennai, irrevocable Bank Guarantee. However, it is open to the General Manager (Tracks & Elevated)to insist on higher deposit as per rules in force.

30.2 Failure of the successful Bidder to comply with the requirements of Sub-Clause 29.1 shall constitute sufficient grounds for cancellation of the award and forfeiture of the Bid Security.

30.3 As per Council Resolution N. 456/2002, Dt: 28-11-2002 the amount of **Additional Security Deposit** to be paid by the Contractor along with the tender for various percentage of rebate are as follows:

Percentage of	Amount of Additional Security Deposit
5 to less than 15%	2%
15% to 20%	50% of Difference between Office value of work and Tender amount.
above 20%	Same as above

30.4 The Contractors has to pay the Additional Security Deposit in the form of National Savings Certificate/ Small savings Instrument / Deposits / Accounts Pledged in favour of Chennai Metro Rail Limited payable at Chennai, irrevocable bank guarantee. However, it is open to the General Manager (Tracks & Elevated)to insist on higher deposit as per rules in force.

30.5 If any of the Contractor has not enclosed Additional Security Deposit for the appropriate value in any one of the above form while submitting tender documents, the tenders of such tenderers will be summarily rejected.

30.6 The Additional Security Deposit by the unsuccessful Tenders will be returned after obtaining proper acknowledgement and absorbing official procedures.

30.7 If percentage of rebate is above 20% tenderer should furnish the break up details, risk, cost and responsibility analysis and produce documents to prove the previous experience and work on hand with performance certificate showing the satisfactory completion of works entrusted in order to substantiate that the quoted rate is workable for complete execution as detailed in tender.

31.1 Adjudicator:

The General Manager (Tracks & Elevated)will propose the person to be appointed as Adjudicator under the Contract.

31.2. Arbitration

In case of any dispute or difference between the parties to the contract either during progress or after the completion of the work or after the termination, abandonment, or breach of contract or as to any matter or thing arising there under except as to the matters left to the sole discretion of the General Manager (Tracks & Elevated)as to the withholding by the payment of any bill to which the contractor may claim to be entitled, then either party shall forthwith give to the other, notice of such dispute or difference shall be referred to the Arbitrator and the award of such Arbitrator shall be Final binding on the parties, progress of work shall not be suspended or delayed on account of the reference of the dispute to arbitration under this clause.

Either party within a period shall be fixed by the arbitration file before the arbitration statement of the case and also shall all documents relating to or having a hearing on the case The Arbitrator shall not be bound to observe the ordinary rules of procedure applicable to trails before judicial Tribunals nor to hear or receive formal evidence, but may pass an

award on the documents and statements of the case filed by the parties or personal inspection or on both. The Arbitrator shall have power to view the subject matter of the dispute with or without the parties or their agents to open review and revise any certificate, opinion decision, requisition or notice have in regard to the matters, expressly examined and to determine all matters in dispute which shall be submitted to him and of which notice has been given as aforesaid, in the same manner as if no such certificate, opinion, decision, requisition, or notice been given.

The expenses of such reference to Arbitration shall be awarded by the Arbitrator in his discretion subject to the condition that the amount of expenses awarded to either party shall not exceed the limits set forth, irrespective of the actual expenses incurred by either party. The arbitrator may determine the amount of expenses to be awarded or direct the same to be shared as between solicitor and client or as party, and party and shall direct by whom and to whom and what manner the same shall be borne and paid.

The limits referred in this clause are 5 % monitory award which does not exceeds Rs. 10,000/-, 3 % on which next Rs. 40,000/- or any part thereof, 2 % on the next Rs. 50,000/- or any part thereof.

32. Corrupt or fraudulent Practices:

The bidder shall observe highest standard of ethics during bidding process and execution of the project.

If the Contractor has engaged in corrupt or fraudulent practices, in competing for or in executing the Contract, the Employer may, after given 14 days notice to the Contractor, to terminate the Contract.

"Corrupt practice" means the offering, giving, receiving or soliciting of any thing of value to influence the action of a public official in the procurement process or in contract execution.

"Fraudulent practice" means a misrepresentation of facts in order to influence a procurement process or the execution of a contract to the detrimental to the interest of the Employer, and includes collusive practice among Bidders which is detrimental to the General Manager (Tracks & Elevated)and includes collusive practice among the bidders (prior to or after bid submission.) designed to establish bid prices at artificial non-competitive levels and to deprive the Employer .the benefits of free and open competition.

The General Manager (Tracks & Elevated)will reject a proposal for award if it determines that the Bidder recommended for award has engaged in corrupt or fraudulent practices in competing for the contract in question.

33. Insolvency: If the Contractor is declared insolvent under any applicable law, the Employer may by notice in writing terminate the contract immediately. The contractor shall then demobilize from the site leaving behind; any contractor's equipment which the employer instructs in the notice is to be used until the completion of work.

34. Taking Over: The Employer shall notify the contractor when he considers that the Contractor has completed the works stating the date accordingly. Alternatively, the Employer may notify the Contractor that the works are ready for taking over, stating the date accordingly.

35. Contractor's care of the Works: The contractor shall take full responsibility for the care of the works from the Commencement Date until the date of the Employer's notice under clause 35. Responsibility shall then pass to the Employer. If any loss or damage happens to the Works during the above period, the Contractor shall rectify such loss or damage so that the works confirm with the Contract. Unless the loss or damage happens as a result of an Employer's liability the Contractor shall indemnify the Employer, the Employer's, Contractor's Agents and employees against all loss or damage happening to the Works and against all claims or expenses arising out of the Works caused by a breach of contract, by negligence or by other default of the Contractor, his agents or employees.

36. Compensation Events.

The following are Compensation Events unless they are caused by the Contractor.

(a) The Authority does not give access to a part of the Site mentioned in the current milestone.

(b) The Authority modifies the schedule of other contractors in a way which affects the work of the contractor under the contract.

(c) Ground conditions are substantially more adverse than could reasonably have been assumed before issuance of Letter of Acceptance from the information issued to Bidders (including the Site Investigation Reports), from information available publicly and from a visual inspection of the Site.

(d) The Engineer gives an instruction for dealing with an unforeseen condition, caused by the Authority, or additional work required for safety or other reasons.

(e) The advance payment is delayed.

(f) The effect on the Contractor of any of the Authority's Risks.

(g) Other Compensation Events listed in the Contract Data or mentioned in the Contract if a Compensation Event would prevent the work being completed before the intended completion data, the intended completion date is extended. The Engineer has to decide by how much the intended completion date has to be extended.

As soon as information demonstrating the effect of each Compensation Event upon the Contractor's forecast. It is to be assessed by the Engineer. If the Contractor's forecast is deemed unreasonable, the decision of the Engineer is final binding on the contractor. The Engineer will assume that the Contractor will react competently and promptly to the event.

The Contractor has to not be entitled to compensation to the extent that the Authority's interests are adversely affected by the contractor not having given early warning or not having cooperated with the Engineer.

G. Bid Data Sheet

Instructions to Bidders (ITB) Clause Reference	Bid Data
	A. General
1.1	**Construction of Foot Over Bridge (FOB) with escalator and lifts at Alandur CMRL Metro Station and across GST Road at Km 12/6 of G.S.T Road.**
3.2(k) 3.4(a) (ii)	The bidder should have achieved a minimum **Average Annual Turnover** during the last 3 years ending 31st March of the previous financial year (2013 - 2014, 2014 - 2015, 2015 - 2016) in the Civil Engineering construction field should be at least of Rs.302 Lakhs (30% of the estimated cost).
3.2 (c)	Tender Experience of having successfully completed similar works during last 5 years (2011-2012, 2012 - 2013, 2013 - 2014, 2014 - 2015, 2015 - 2016) for Centre Government of India / State Government Department / Government undertaking in India should be either of the following: d). Three similar completed works costing not less than the amount equal to 40% of the estimated cost. e). Two similar completed works costing not less than the amount equal to 50% of the estimated cost. f). One similar completed works costing not less than the amount equal to 80% of the estimated cost. Similar Nature of work should also include the following Minimum Quantities of work at least any one year during the last five years. (i) RCC (M25) - 110 cum (ii) Steel Reinforcement - 130 MT ***Similar Work" means similar work defined as similar works shall be foot over bridge or bridges or flyovers on highways/arterial roads/railway crossings or grade separators.***
3.2 (d) 3.4 (b)	The essential equipment to be made available for the contract by the successful bidder shall be: RMC Transit Mixer – 1 No's Welding Machine – 3 No's Dewatering Pumps – 1 No's Hydraulic Earth movers – 1 No's Dumper – 1 No's Excavators – 1 No's

<table>
<tr><td></td><td>Lifting Crane – 1 No’s
Mixer Machine - 1 No’s
Needle Vibrating Machine – 2 No’s
Concrete Plant (Optional) - 1 No’s
Adequate Steel Strutting Materials and Site laboratory and equipments. Total Stations and leveling instrument.
Tenderer should give an undertaking that the above equipment’s will be purchased/ hired for the project (if awarded).</td></tr>
<tr><td>3.2 (e)
3.4 (c)</td><td>The minimum Key personnel required for the work
<table>
<tr><th>Sl No</th><th>Position</th><th>Minimum Qualification</th><th>Number</th><th>Total Experience</th></tr>
<tr><td>1</td><td>Project Coordinator</td><td>BE (Civil)</td><td>1</td><td>10</td></tr>
<tr><td>2</td><td>Site Engineer</td><td>BE (Civil)</td><td>1</td><td>5</td></tr>
<tr><td>3</td><td>Electrical Engineer</td><td>DCE (Civil)</td><td>1</td><td>5</td></tr>
<tr><td>4</td><td>Site Supervisor / Surveyor</td><td>DCE (Civil)</td><td>1</td><td>5</td></tr>
</table></td></tr>
<tr><td>3.2 (g)
3.4 (d)</td><td>The minimum amount of liquid assets and /or credit facilities net of other contractual commitments of the successful bidder shall be
10% of the value of work</td></tr>
<tr><td>3.2 (f)</td><td>Audited Balance sheet for the last 5 financial years. Attested copies to be attached.</td></tr>
<tr><td>3.2 (i)</td><td>Information regarding any litigation current or during the last 5 financial years in which the bidder is involved the parties concerned and disputed amount. Forms - 8, 9 & 10 should filled up in a Rs.20/- stamp paper signed by notary public and attached.</td></tr>
<tr><td>3.4 (f)</td><td>Bid Capacity > value of the works
Bid Capacity = A x N x 1.5 – B
A= Maximum Value of Construction work executed in any one year during the last 5 financial years
B= Existing Commitments and on going works to be completed during the next two years.
N= No. of Years for completion of the work.</td></tr>
<tr><td></td><td>B. Bidding Documents</td></tr>
<tr><td>7.2</td><td>The number of copies of the Bid to be completed and returned shall be ONE</td></tr>
</table>

	C. Preparation of Bids
(7.2) (16.1)	The number of copies of the Bid to be completed and returned shall be *ONE*
(12.3)	The rates and prices quoted by the Bidder shall not be subject to adjustment during the performance of the Contract
(14.1)	The period of Bid validity shall be ***120*** **days** after the deadline for Bid submission specified in the Bid Data sheet.
(15.1)	The amount of Bid Security shall be ***Rs. INR 8,84,000/- (Rupees Eight Lakhs Eighty Four Thousand only)*** *as provided in the Invitation to Bid or other forms as per conditions of contract]*
	D. Submission of Bids
(18.1)	The address for the purpose of Bid submission is ***Director (Projects), Chennai Metro Rail Limited, Admin Building, CMRL Depot, Poonamallee High Road, Koyambedu, Chennai –600107, Tamil Nadu, India.***
(17.3)	The deadline for submission of bids shall be **12/Oct/2017** *up to* ***14.00 Hrs***
	E. Bid Opening and Evaluation
(20.1)	The opening of the Prequalification Bid shall take place at the Office of ***Director (Projects), Chennai Metro Rail Limited, Admin Building, CMRL Depot, Poonamallee High Road, Koyambedu, Chennai –600107, Tamil Nadu, India.***
	F. Award of Contract
(30.0)	The Standard Form of Performance Security acceptable to the General Manager (Tracks & Elevated)shall be *as per section IX*

SECTION III

1. **Pre- Qualification Bid Submission Sheet**
2. **Declaration by the Bidder / Tenderer**
3. **Qualification Information**

Section III

1. Pre-Qualification Bid Submission Sheet

Date:……

Invitation for Bid No: [**CMRL/CON/SAL-FOB-RT-02/2017**]

To:

The General Manager (Tracks & Elevated)
Chennai Metro Rail Limited (CMRL),
Admin Building, CMRL Depot,
Poonamallee High Road, Koyambedu,
Chennai –600107, Tamil Nadu

Sir,

1. Being duly authorized to represent and act on behalf of …..…. *[Name of the Bidder]*, hereinafter, "The Bidder" and having reviewed and fully understand all the bidding information provided, the undersigned hereby applies to be pre-qualified by yourselves as a bidder for the ……**.** *[Insert Name of the* work]".

2. The Bid is made in the full understanding of the following and declares:

   a) We have examined and have no reservations to the Bidding Document, including Addenda No.(s)…… issued in accordance with ITB Clause 9.

   b) We, including any subcontractors or suppliers for any part of the contract, do not have any conflict of interest in accordance with ITB Sub-Clause 2.4.

   c) We, in accordance with GCC Sub-Clause & Appendix to Bid, plan to subcontract the following key activities or parts of the works to the following sub contractors.

Name of Sub Contractor	Address	Key activity	Tentative Amount of the sub activity

(If no part to be sub contracted, indicate "none")

   d) We understand that you may accept/ reject any Bidding, cancel the Bidding process at any time and reject all the Bids and that you are not bound either to accept any Bids that you may received without incurring any liability to the Bidders, in accordance with ITB Clause 27.

   e) We understand that your Agency will not be liable for any such actions and will be under no obligation to inform the Bidder of the grounds from them.

3. Attached herewith are the following:

   i) Income Tax and Sales Tax clearance certificates for the **last three years** issued by the appropriate authority:

   ii) Demand Draft for **Rs**……towards cost of Bid documents in case purchased in the counter.

   iii) Bid Security for **Rs.** …… in the form of:

      a) Demand Draft …..… *(Furnish details of the Demand Draft)…..…*

      b) Chalan …..… *(Furnish details of the Chalan)…..…*

      c) Any other Form mentioned in Cl. 15.1 of ITB *(Furnish Details)*

4. Attached to this letter are copies of original documents defining:

   i) The Bidder's legal status;

   ii) The principal place of business;

   iii) The place of incorporation (for Bidders that are corporations) or the place of registration and the nationality of the owner (s) for Bidders that are partnerships or individually owned firms).

5. The Chennai Metro Rail Limited and its authorized representatives are hereby authorized to conduct any inquiries or investigations to verify the statements, documents and information submitted in connection with this Bid, and to seek clarification from our bankers and clients regarding any financial and technical aspects. This Prequalification Bid Submission Sheet will also serve as authorization to any individual or authorized representative or any institute referred to in the supporting information to provide such information deemed necessary and requested by the Chennai Metro to verify statements and information provided in this Bids, or with regard to the resources, experience and competence of the Bidder.

6. The Chennai Metro Rail Limited and its authorized representatives may contact the following persons for further information:

Name, Telephone and Fax No. of person

General and Management Information	
Personnel	
Technical Enquiries	

Signature of Bidder **Page 34 of 261**

Financial Enquiries	

7. Appended to this Bids, we give details of the participation of each party, including capital contribution and profit/ loss agreements, to the joint Venture or associations. We also specify the financial commitment in terms of the percentage of the value of the/ each contract, and the responsibilities for execution of the/each contract.

8. We confirm that in the event that we submit bid, that as well as any resulting contract will be:

   i) Signed so as to legally bind all partners jointly and severally; and

   ii) Submitted with a Joint Venture agreement providing the joint and several liabilities of all partners in the event the contract is awarded to us.

9. The undersigned declare that the statement made and the information provided in the duly completed Bids are complete, true, and correct in every detail.

Name:……

In the Capacity of …….

Signed
……..

Duly authorized to sign the Bids for and on behalf of …….

Date ……

Signature of Bidder **Page 35 of 261**

Section III

2. DECLARATION BY THE BIDDER/ TENDERER

I/We _____ hereby declare that I/We am/ are not in any way related to any officer who is in charge of …… or having control of this work as referred in Clause 2.4 of ITB.

I/We agree that if, at any stage, it is found that this declaration is untrue, the bid security/ performance security paid by me/ us will be forfeited and the contract entered will stand cancelled at the risk and cost of contractor. It is understood that the relationship with the officer referred to herein will be restricted to those referred in Cl.2.4 of ITB.

Signature of the bidder

Place:

Date:

Section III

3. QUALIFICATION INFORMATION

3.1 PRE QUALIFICATION BID QUESTIONNAIRE

Sl No	Questions	Answers to be furnished by the bidder
1	Name of Firm	
2	Nationality	
3	Head Office Address Postal Telex No Fax No. E-Mail	
4	Type of Organization Individual Partnership Incorporated company	
5	Year & place of establishment	
6	Give brief description of field/ areas in which you have executed work. Please furnish details and particulars of such works in the relevant formats attached.	
7	Are you registered with any other Government/ Department / Public undertaking (if yes, give details)	
8	What are your sources of finance (Please give details of bank reference – certificate from bank endorsing your financial stability and certificate to substantiate other sources)	
9	Give the last five years account with auditor's reports, balance sheet, profit and loss account, and income tax clearance certificate.	
10	How much is your paid up capital How much is your working capital How much is your annual turnover for the last five years (Give separately for each year)	

Sl No	Questions	Answers to be furnished by the bidder
	How much is your net income for the last five years (Give separately for each year)	
11	Do you intend to associate any other organisation for the works, which you are bidding? If so, give full particulars of that organization separately under each head of questionnaire and forms	
12	Formats (enclosed may filled) Details of Engineers & Managerial Personnel Details of machinery and equipment owned by the Company List of Machinery & equipment that company proposes to take on rent and use for the work Present activities in which your firm is engaged as a Main contractor (last five years) Present activities in which your firm is working in Joint Venture (last five years) Material Testing facilities available with the firm	

Note: In the case of Joint venture/ consortium/ group, the lead bidder shall submit the answers as per the above questionnaire pertaining to each firm in the group.

Signature of Bidder **Page 38 of 261**

3.2 LIST OF EQUIPMENTS PROPOSED TO DEPLOY FOR THE WORK

(To be filled by the Bidder)

ANNEXURE 1

Sl No.	Particulars	Capacity	Number	Own/ Lease/ Rent

Signature of Bidder **Page 39 of 261**

3.3 LIST OF KEY PERSONNEL PROPOSED TO DEPLOY FOR THE WORK

Sl No	Name	Position	Qualification	Years of Experience in the relevant field

Signature of Bidder **Page 40 of 261**

3.4 APPLICATION INFORMATION SHEET

Application Information	
Bidder's Legal Name	
In the case of Joint Venture/ Consortium/Group, legal name of each partner	
Bidder's actual or intended year of constitution	
Bidder's legal address in country of constitution	
Bidder's authorized representative (name, address, telephone no., e-mail address)	
Attached are copies of the following original documents 1. In the case of single entity, articles of incorporation or constitution of the legal entity named above. 2. Power of attorney to represent the firm or JV/consortium /group named above. 3. In case of JV, power of attorney for lead member of consortium by other JV partner	

Signature of Bidder **Page 41 of 261**

3.5 JOINT VENTURE INFORMATION SHEET

DETAILS OF PARTNER(S) OTHER THAN LEAD PARTNER

Partner	
Partner's legal name	
Partner's year of constitution	
Partner's Legal address in country of Constitution	
Partner's authorized representative (name, address, telephone no; fax and e-mail address)	

3.6 FINANCIAL STATEMENT (DATA FOR PREVIOUS FIVE YEARS - IN INDIAN RUPEES)

a. Information from Balance Sheet

Year			
Total Assets			
Total Liabilities			
Net Worth			
Current Assets			
Current Liabilities			

b. Information from Income Statement

Year			
Total Revenue			
Profit before Tax			
Profit after tax			

Attached are copies of financial statements (balance sheets including schedules and income statements) for the last three years, as indicated above, complying with the following conditions

All such documents reflect the financial situation of the bidder

Historical financial statements must be audited by a certified chartered accountant

Historical financial statements must be complete, including all schedules to the financial statements

Note: Bidder and Each member of JV/ consortium/ group must furnish details separately in this form

3.7 TOTAL ANNUAL TURNOVER

(Bidder and/or Each member of Joint Venture/ consortium/ group must fill in this form)

TOTAL ANNUAL TURNOVER FOR THE LAST THREE FINANCIAL YEARS	
Year	**Indian Rupee**
Total	

3.8 PRESENT ACTIVITIES IN WHICH BIDDER FIRM IS ENGAGED AS A LEAD PARTNER

(Each bidder or member of JV/ consortium/ group must fill in this form)

Sl No	Name & Type of project/ work which you are presently executing	Brief technical description	Name & Address of client	Period of contract (as provided in the agreement)	Construction cost of project (in Rs)	Type & amount of portion sublet by you	Year of Starting	Percentage completed Works	Name & Address of consultant if any

Signature of Bidder **Page 45 of 261**

3.9 PRESENT ACTIVITIES IN WHICH BIDDER FIRM IS WORKING IN JOINT VENTURE

(Each bidder or member of JV/ consortium/ group must fill in this form)

Sl N0	Name of the project/works and its location (phase of work for which you are responsible)	Brief technical description	Name & Address of client	Period of contract	Construction cost of project (in Rs) (entirely yours)	Year of Starting	Percentage completed works	Name with whom you are in JV	Name & Address of consultant if any

Signature of Bidder **Page 46 of 261**

3.10 PRESENT ACTIVITIES IN WHICH BIDDER FIRM IS WORKING AS PARTNER

(INDICATE PLACE OF WORK FOR WHICH FIRM IS RESPONSIBLE)

(Each bidder or member of JV/ consortium/ group must fill in this form)

Name of the Project /works and its location (phase of work)	Name & Address of client	Construction cost in Rs./ Entire cost of your portion	Name of main contractors	Period of contract (as provided in agreement)	Year of Starting	Percentage completed works	Name & Address of consultant if any

Signature of Bidder **Page 47 of 261**

3.11 COMPLETED WORKS IN WHICH FIRM WAS THE LEAD PARTNER

(DURING LAST 5 YEARS)

(Each bidder or member of JV/ consortium/ group must fill in this form)

Sl No	Name & Type of project/ works and its location	Brief technical description	Name & Address of client	Period of contract (as provided in the agreement)	Construction cost of Project (in Rs)	Type & amount of Portion sublet by you	Year of Starting	Percentage Completed works	Name & Address of consultant if any

Signature of Bidder **Page 48 of 261**

3.12 COMPLETED WORKS IN WHICH FIRM WAS IN JOINT VENTURE

(DURING LAST 5 YEARS)

(Each bidder or member of JV/ consortium/ group must fill in this form)

Sl No	Name & Type of project/ works and its location	Brief technical description	Name & Address of client	Construction cost of Project (in Rs)		Period of contract (as provided in the agreement)	Year of Starting	Year of Completion		Reasons for delay if any	Name & Address of consultant if any
				Entire	yours			Scheduled	Actual		

Signature of Bidder **Page 49 of 261**

3.13 DETAILS OF SUB CONTRACTOR AND THEIR RESPONSIBILITES

(Applicable in case of subletting)

Sl No	Name & Address of Sub Contractor	Responsibility	Value of work to be sublet.

Signature of Bidder **Page 50 of 261**

Definitions & Interpretations

1. **Act** means the Tamil Nadu transparency in Tenders Act, 1998 (Tamil Nadu Act 43 of 1998).

2. **Rules** means The Tamil Nadu Transparency in Tender Rules, 2000

3. **Adjudicator:** The General Manager (Tracks & Elevated)will propose the person to be appointed as Adjudicator under the contract in the Letter of Acceptance.

4. **Arbitrator**: If a party is dissatisfied with the decision of the Adjudicator or no decision is given within the time set out the party may give notice of dissatisfaction and a dispute which has been the subject of a notice of dissatisfaction has to be finally settled by Arbitral tribunal. The Arbitrator can revise the decision of the Adjudicator. The Arbitral Tribunal consists of 3 Arbitrators, one each to be appointed by the Authority and the Contractor. The third Arbitrator has to be chosen by the two Arbitrators so appointed by the parties and has to act as presiding arbitrator. In case of failure of the two arbitrators appointed by the parties to reach upon a consensus within period of 30 days from the appointment of the arbitrator appointed subsequently, the Presiding Arbitrator has to be appointed by President of the Institution of Engineers (India).

5. **The Authority** (CMRL) or his authorised representative is the party who Employs the Contractor to carry out the Works

6. **Earnest Money Deposit** means the amount required to be remitted by a bidder along with his bid indicating his willingness to implement the contract.

7. **Bill of Quantities** means the priced and completed Bill of Quantities forming part of the Bid.

8. **BIS** means Bureau of Indian Standards.

9. **Compensation Events** are those defined in Clause -36.

10. **The Completion Date** is the date of completion of the Works as certified by the Director of Projects.

11. **The Contract** is the Contract between the Authority and the Contractor to execute, complete, and maintain the Works. It consists of the documents listed in Clause 11.1

12. **The Contractor** is a person or corporate body whose Bid to carry out the Works has been accepted by the Authority.

13. **Tenderer or Bidder:** Any person, firm or Corporation submitting a tender for the work contemplated, acting directly or through a duly authorized representative.

14. **The Contractor's Bid** is the completed bidding document submitted by the Contractor to the Authority.

15. **Bid Price:** The prices and discounts quoted by the bidder in the letter of bid and in the bill of quantities.

16. **The Contract Price** is the price stated in the Letter of Acceptance and thereafter as adjusted in accordance with the provisions of the Contract.

17. **Days** are calendar days; months are calendar months.

18. **A Defect** is any part of the Works not completed in accordance with the Contract.

19. **The Defects Liability Certificate** is the certificate issued by Engineer-In-Charge upon correction of defects by the Contractor.

20. **The Defects Liability Period** is the period named **in the Contract Data and calculated from the** Completion Date.

21. **Drawings** include calculations and other information provided or approved by the Engineer-In-Charge for the execution of the Contract.

22. **The Authority** (CMRL) is the party who employs the Contractor to carry out the Works

23. **The Engineer** is the person named in the Contract Data (or any other) competent person appointed by the General Manager (Tracks & Elevated)and notified to the Contractor, to act in replacement of the Engineer) who is responsible for supervising the execution of the Works and administering the Contract.

24. **Equipment** is the Contractor's machinery and vehicles brought temporarily to the Site to construct the Works.

25. **The Initial Contract** Price is the Contract Price listed in the Authority's Letter of Acceptance.

26. **The Intended Completion Date i**s the date on which it is intended that the Contractor has to complete the Works. The Intended Completion Date is specified in the Contract Data. The Intended Completion Date may be revised only by the Engineer-In-Charge by issuing an extension of time.

27. **Materials** are all supplies, including consumables, used by the Contractor for incorporation in the Works.

28. **Plant** is any integral part of the Works that has to have a mechanical, electrical, chemical, or biological function.

29. **The Site** is the area defined as such in the Contract Data.

30. **Site Investigation Reports** are those that were included in the bidding documents and are factual and interpretative reports about the surface and subsurface conditions at the Site.

31. **Specification** means the Specification of the Works included in the Contract and any modification or addition made or approved by the Engineer-In-Charge.

32. **The Start Date** is given in the Contract Data. It is the latest date when the Contractor has to commence execution of the Works. It does not necessarily coincide with any of the Site Possession Dates.

33. **Subcontractor** is a person or corporate body who has a Contract with the Contractor to carry out a part of the work in the Contract, which includes work on the Site.

34. **Temporary Works** are works designed, constructed, installed, and removed by the Contractor that are needed for construction or installation of the Works.

35. **Two-cover system** means a procedure under which the bidders are required to simultaneously submit two separate sealed covers, one containing the Earnest Money (Bid security) and the details of their capability to undertake the tender which will be opened first and the second cover containing the price quotation which will be opened only if the bidder is found qualified to execute the Bid.

Volume II

PRICE BID

Table of Contents

SECTION IV

LETTER OF ACCEPTANCE (LOA)

Section IV

1. Letter of Acceptance

[Letterhead paper of the Employer]

By Cable/ Registered Post with acknowledgement due/

From To

---------- ----------

---------- ----------

Letter No. ---------- Dt ……..

Sub:

Ref: (*Insert Bid No. and date*)

This is to notify you that your Bid dated *[date]* for execution of the *[name of the Contract and identification number, as given in the Contract Data]* for the Contract Price of ……*[amount in numbers and words]*, is hereby accepted by our Agency.

(a) We propose that *[name of the Adjudicator]* be appointed as the Adjudicator.

(b) You are hereby requested to furnish performance security in the form detailed in Cl. 29.1 of ITB for an amount of Rs. …… within 14 days of the receipt of the Letter of Acceptance. The performance security IN THE FORM OF Bank Guarantee shall be valid up to 2 (Two) years after completion of work certified by the Engineer in Charge. You are requested to sign the Contract within -------- days from the date of receipt of this letter, failing which action as stated in ITB will be taken

(c) You are hereby instructed to proceed with the execution of the said Works in accordance with the Contract documents.

Authorized Signature: _____

Name and Title of Signatory: _____

Name of Agency: _____

Attachment: Agreement

2. Contractor's Bid

Description of Work: Construction of Foot Over Bridge (FOB) with escalator and lifts at Alandur CMRL Metro Station and across GST Road at Km 12/6 of G.S.T Road including various utility shifting works.

[date]

To:
The General Manager (Tracks & Elevated)
Chennai Metro Rail Limited (CMRL),
Admin Building, CMRL Depot,
Poonamallee High Road, Koyambedu,
Chennai –600107, Tamil Nadu

We offer to execute the *[name and identification number of Contract]* in accordance with the Conditions of Contract accompanying this Bid for the Contract Price of *[amount in numbers]*, *[amount in words]*.

We accept the appointment of *[name proposed in Letter of Acceptance]* as the Adjudicator.

[or]

We do not accept the appointment of *[name proposed in Letter of Acceptance]* as the Adjudicator, and propose instead that *[name]* be appointed as Adjudicator, whose daily fees and biographical data are attached.

This Bid and your written acceptance of it shall constitute a binding Contract between us. We understand that you are not bound to accept the lowest or any Bid you receive.

We hereby confirm that this Bid complies with the Bid validity and Bid Security required by the bidding documents and specified in the Bidding Data.

Commissions or gratuities, if any, paid or to be paid by us to agents relating to this Bid, and to contract execution if we are awarded the contract, are listed below:

Name and address of agent	**Amount**	**Purpose of Commission or gratuity**
(If none, state "none")."		

Authorized Signature: _____

Name and Title of Signatory: _____

Name of Bidder: _____

Address: _____

3. Agreement

This Agreement, made the *[day]* day of *[month]*, *[year]* between *[name and address of Employer]* (hereinafter called “the Employer”) and *[name and address of Contractor]* (hereinafter called “the Contractor”) of the other part.

Whereas the Employer is desirous that the Contractor execute *[name and identification number of Contract]* (hereinafter called “the Works”) and the Employer has accepted the Bid by the Contractor for the execution and completion of such Works and the remedying of any defects therein.

Now this Agreement witnesseth as follows:

1. In this Agreement, words and expressions shall have the same meanings as are respectively assigned to them in the Conditions of Contract hereinafter referred to, and they shall be deemed to form and be read and construed as part of this Agreement.

2. In consideration of the payments to be made by the Employer to the Contractor as hereinafter mentioned, the Contractor hereby covenants with the Employer to execute and complete the Works and remedy any defects therein in conformity in all respects with the provisions of the Contract.

3. The Employer hereby covenants to pay the Contractor in consideration of the execution and completion of the Works and the remedying of defects wherein the Contract Price or such other sum as may become payable under the provisions of the Contract at the times and in the manner prescribed by the Contract.

In Witness whereof the parties thereto have caused this Agreement to be executed the day and year first before written.

The Common Seal of _____was hereunto

Signed, Sealed, and Delivered by the said _____in the presenc

Binding Signature of Employer _____

Binding Signature of Contractor _____

4. WORK ORDER CUM SITE HANDING OVER LETTER

From To

The General Manager (Tracks & Elevated)
Chennai Metro Rail Limited (CMRL),
Admin Building, CMRL Depot,
Poonamallee High Road, Koyambedu,
Chennai –600107, Tamil Nadu.

_____ Dt.

Sir,

Sub: Tender for ---------- Tender accepted – Notification of handing over possession of the site – Regarding.

Ref:- 1. Your Tender dated on ----------

2. Letter of Acceptance dated ----------

3. Agreement dated ----------

*****

Your tender for **Rs……..** for …….., and you have signed agreement. In accordance with the provisions of the preliminary specification in T.N.B.P., I hereby hand over to you to possession of the site for carrying out the above mentioned work.

The work should be commenced forthwith and carried out in accordance with the rate of progress specified in the articles of agreement and completed within time limit i.e., ---------- months specified therein.

Director (Projects)

SECTION V

CONDITIONS OF CONTRACT

Section V: Conditions of Contract

A. General

Definitions

1. Boldface type is used to identify defined terms.
2. **Act** means the Tamil Nadu transparency in Tenders Act, 1998 (Tamil Nadu Act 43 of 1998).
3. **Rules** means The Tamil Nadu Transparency in Tender Rules, 2000
4. **Adjudicator:** The General Manager (Tracks & Elevated)will propose the person to be appointed as Adjudicator under the contract.
5. **Arbitrator**: If a party is dissatisfied with the decision of the Adjudicator or no decision is given within the time set out the party may give notice of dissatisfaction and a dispute which has been the subject of a notice of dissatisfaction has to be finally settled by Arbitral tribunal. The Arbitrator can revise the decision of the Adjudicator. The Arbitral Tribunal consists of 3 Arbitrators, one each to be appointed by the Authority and the Contractor. The third Arbitrator has to be chosen by the two Arbitrators so appointed by the parties and has to act as presiding arbitrator. In case of failure of the two arbitrators appointed by the parties to reach upon a consensus within period of 30 days from the appointment of the arbitrator appointed subsequently, the Presiding Arbitrator has to be appointed by President of the Institution of Engineers (India).
6. **The Authority** (CMRL) or his authorised representative is the party who Employs the Contractor to carry out the Works
7. **Earnest Money Deposit** means the amount required to be remitted by a bidder along with his bid indicating his willingness to implement the contract.
8. **Bill of Quantities** means the priced and completed Bill of Quantities forming part of the Bid.
9. **BIS** means Bureau of Indian Standards.
10. **Compensation Events** are those defined in Clause - hereunder.
11. **The Completion Date** is the date of completion of the Works as certified by the Authority.
12. **The Contract** is the Contract between the Authority and the Contractor to execute, complete, and maintain the Works. It consists of the documents listed in Clause 2.3 below.
13. **The Contractor** is a person or corporate body w4hose Bid to carry out the Works has been accepted by the Authority.

14. **Tenderer or Bidder:** Any person, firm or Corporation submitting a tender for the work contemplated, acting directly or through a duly authorized representative.

15. **The Contractor's Bid** is the completed bidding document submitted by the Contractor to the Authority.

16. **Bid Price**: The prices and discounts quoted by the bidder in the letter of bid and in the bill of quantities.

17. **The Contract Price** is the price stated in the Letter of Acceptance and thereafter as adjusted in accordance with the provisions of the Contract.

18. **Days** are calendar days; months are calendar months.

19. **A Defect** is any part of the Works not completed in accordance with the Contract.

20. **The Defects Liability Certificate** is the certificate issued by Authority upon correction of defects by the Contractor.

21. **The Defects Liability Period** is the period named in the **Contract Data** and calculated from the Completion Date.

22. **Drawings** include calculations and other information provided or approved by the Authority for the execution of the Contract.

23. **The Authority** (CMRL) is the party who employs the Contractor to carry out the Works

24. **The Authority** is the person named in the Contract Data (or any other) competent person appointed by the CMRL and notified to the Contractor, to act in replacement of the Authority) who is responsible for supervising the execution of the Works and administering the Contract.

25. **Equipment** is the Contractor's machinery and vehicles brought temporarily to the Site to construct the Works.

26. **The Initial Contract** Price is the Contract Price listed in the Authority's Letter of Acceptance.

27. **The Intended Completion Date i**s the date on which it is intended that the Contractor has to complete the Works. The Intended Completion Date is specified in the Contract Data. The Intended Completion Date may be revised only by the Authority by issuing an extension of time.

28. **Materials** are all supplies, including consumables, used by the Contractor for incorporation in the Works.

29. **Plant** is any integral part of the Works that has to have a mechanical, electrical, chemical, or biological function.

30. **The Site** is the area defined as such in the Contract Data.

31. **Site Investigation Reports** are those that were included in the bidding documents and are factual and interpretative reports about the surface and subsurface conditions at the Site.

32. **Specification** means the Specification of the Works included in the Contract and any modification or addition made or approved by the Authority.

33. **The Start Date** is given in the Contract Data. It is the latest date when the Contractor has to commence execution of the Works. It does not necessarily coincide with any of the Site Possession Dates.

34. **Subcontractor** is a person or corporate body who has a Contract with the Contractor to carry out a part of the work in the Contract, which includes work on the Site.

35. **Temporary Works** are works designed, constructed, installed, and removed by the Contractor that are needed for construction or installation of the Works.

36. **Two-cover system** means a procedure under which the bidders are required to simultaneously submit two separate sealed covers, one containing the Earnest Money (Bid security) and the details of their capability to undertake the tender which will be opened first and the second cover containing the price quotation which will be opened only if the bidder is found qualified to execute the Bid.

38 Alteration, Additions and Omissions

The Engineer shall make any variation of the form, quality or quantity of the works or any part thereof that may, in his opinion, be necessary and for that purpose, or if for any other reason it shall, in his opinion, be appropriate, he shall have the authority to instruct the Contractor to do and the Contractor shall do any of the following:

(a) Increase or decrease the quantity of any work included in the Contract,

(b) Omit any such work (but not if the omitted work is to be carried out by the Authority or by another contractor).

(c) Change the character or quality or kind of any such work (d) Change the levels, lines, position and dimensions of any part of the works.

(e) Execute additional work of any kind necessary for the completion of the Works, or

(f) Change any specified sequence or timing of construction of any part of the works.

No such variation shall in any way vitiate or invalidate the Contract but the effect if any, of all such variations shall be valued in accordance with Clause 52, provided that where the issue of an instruction to vary the works is necessitated by some default of or breach of contract by the Contractor or for which he is responsible, any additional cost attributable to such default shall be borne by the Contractor.

A **Variation** is an instruction given by the Authority which varies the Works. A variation may an alteration/ alterations, addition / additions and omission / omissions.

Instructions for Variations: The Contractor shall not make any such variation without an instruction of the Engineer, provided that no instruction shall be required for increase or decrease in the quality of any work where such increase or decrease is not the result of an instruction given under this Clause, but is the result of the quantities exceeding or being less than those stated in the Bill of Quantities.

The **Works** are what the Contract requires the Contractor to construct, install, and turn over to the Authority, as defined in the Contract Data.

2. Interpretation

2.1 In interpreting these Conditions of Contract, singular also means plural, male significance. Words have their normal meaning under the language of the also means female or neuter, and the other way around. Headings have no Contract unless specifically defined. The Authority will provide instructions clarifying queries about these Conditions of Contract.

2.2 If sectional completion is specified in the Contract Data, references in the Conditions of Contract to the Works, the Completion Date, and the Intended Completion Date apply to any Section of the Works (other than references to the Completion Date and Intended Completion Date for the whole of the Works).

2.3 The documents forming the Contract shall be interpreted in the following order of priority:

(1) Agreement,

(2) Letter of Acceptance,

(3) Contractor's Bid,

(4) Contract Data,

(5) Conditions of Contract,

(6) Specifications,

(7) Drawings,

(8) Bill of Quantities, and

(9) Any other document listed in the Contract Data as forming part of the Contract.

3. Language and Law

3.1 The language of the Contract and the law governing the Contract are stated in the Contract Data.

4. Decision of Authority

4.1 Except where otherwise specifically stated, the Authority will decide contractual matters between the Authority and the Contractor in the role representing the Authority.

5. Delegation

5.1 The Authority may delegate any of his duties and responsibilities to his sub-ordinates except to the Adjudicator, after notifying the Contractor, and may cancel any delegation after notifying the Contractor.

6. Communications

6.1 Communications between parties that are referred to in the Conditions shall be effective only when in writing. A notice shall be effective only when it is delivered.

7. Subcontracting

7.1 The Contractor may subcontract with the approval of the Authority, but may not assign the Contract without the approval of the Authority in writing. Subcontracting shall not alter the Contractor's obligations. Any fault identified during the execution of work carried out by the sub-contractor, the contractor will be liable to rectify the defects as per the direction of the Authority

8. Other Contractors

8.1 The Contractor shall cooperate and share the Site with other contractors, public authorities, utilities, and the Authority between the dates given in the Schedule of Other Contractors, as referred to in the Contract Data. The Contractor shall also provide facilities and services for them as described in the Schedule. The Authority may modify the Schedule of Other Contractors, and shall notify the Contractor of any such modification.

9. Personnel

9.1 The Contractor shall employ the key personnel named in the Schedule of Key Personnel, as referred to in the Contract Data, to carry out the functions stated in the Schedule or other personnel approved by the Authority. The Authority will approve any proposed replacement of key personnel only if their relevant qualifications and abilities are substantially equal to or better than **those of the personnel listed in the Schedule.**

9.2 If the Authority asks the Contractor to remove a person who is a member of the Contractor's staff or work force, stating the reasons, the Contractor shall ensure that the person leaves the Site within seven days and has no further connection with the work in the Contract.

10. Contractor's Risks

10.1 The Contractor carries the risks which this Contract states are Contractor's risks.

11. Contractor's Risks

11.1 From the Starting Date until the Defects Correction Certificate has been issued, the risks of personal injury, death, and loss of or damage to property (including, without limitation, the Works, Plant, Materials, and Equipment) which are not Authority's risks, but are of Contractor's risks.

12. Insurance

12.1 The contractor shall have to provide a minimum insurance of man power and equipments. This insurances cover should start from the date of starting of work and should be valid up to the end of execution period. The responsibility of timely payment of the premium as well as that of lodging claims as and when situation arises will be that of contractor. All insurances which the contractor requires to enter into under the contract shall be affected with an insurer or insurers and in terms approved by the Authority.

12.2 Accident or Injury to Contractor's Employees

The department shall not be liable for or in respect of any damages or compensation payable by law in respect of or in consequences of any accident or injury to any person in the employment of the contractor (other than accident or injury as may be attributed to the department or its employees) & the contractor shall indemnify the department against all such damages and compensations and against all actins, suits, claims, cost or expenses arising there from. The contractor shall insure against such liabilities and shall continue such insurance during the whole of the time that any persons are employed by him on the works

12.3 Remedy on Contractor's Failure to Insure

If the contractor fail to effect and keep in force the insurances referred to or any other insurance which he may be required to effect under the terms of the contract then and in any such case the department may effect and keep in force any such insurance and pay such premiums as may be necessary for the purpose and from time to time deduct the amount so paid by the department as aforesaid from any moneys due or which may become due to the contractor or recover the same as a debt due from the contractor.

12.4 Policies and certificates for insurance shall be delivered by the Contractor to the Engineer in - Charge for the Engineer in - Charge approval before the Start Date. All such Engineer in- Charge shall provide for compensation to be payable in the types and proportions of currencies required to rectify the loss or damage incurred.

12.5 If the Contractor does not provide any of the policies and certificates required, the Authority may affect the insurance which the Contractor should have provided and recover the premiums the Authority has paid from payments otherwise due to the Contractor or, if no payment is due, the payment of the premiums shall be a debt due.

12.6 Alterations to the terms of insurance shall not be made without the approval of the Engineer in - Charge.

12.7 Both parties shall comply with any conditions of the insurance policies.

13. Queries about the Contract Data

13.1 The Authority will clarify queries on the Contract Data.

14. Contractor to Construct the Works

14.1 The Contractor shall construct and install the Works in accordance with the Specifications and Drawings.

15. The Works to Be Completed by the Intended Completion Date

15.1 The Contractor may commence execution of the Works on the Start Date and shall carry out the Works in accordance with the Program submitted by the Contractor, as updated with the approval of the Authority, and complete them by the Intended Completion Date.

16. Approval by the Authority

16.1 The Contractor shall submit Specifications and Drawings showing the proposed Temporary Works to the Authority, who is to approve them if they comply with the Specifications and Drawings.

16.2 The Contractor shall be responsible for design of Temporary Works.

16.3 The Authority's approval shall not alter the Contractor's responsibility for design of the Temporary Works.

16.4 The Contractor shall obtain approval of third parties to the design of the Temporary Works, where required.

16.5 All Drawings prepared by the Contractor for the execution of the temporary or permanent Works, are subject to prior approval by the Authority before this use.

17. Safety

17.1 The Contractor shall be responsible for the safety of all activities on the Site.

18. Discoveries

18.1 Anything of historical or other interest or of significant value unexpectedly discovered on the Site shall be the property of the Authority. The Contractor shall notify the Authority of such discoveries and carry out the Authority's instructions for dealing with them.

19. Possession of the Site

19.1 The Authority shall give possession of all parts of the Site to the Contractor.

20. Access to the Site

20.1 The Contractor shall allow the Authority and any person authorized by the Authority access to the Site and to any place where work in connection with the Contract is being carried out or is intended to be carried out.

21. Instructions, Inspections and Audits

21.1 The Contractor shall carry out all instructions of the Authority which comply with the applicable laws where the site is located.

21.2 The Contractor shall permit the Corporation to inspect the Contractor's accounts and records relating to the performance of the Contractor and to have them audited by auditors appointed by the Corporation, if so required by the Corporation.

22. Disputes

22.1 If the Contractor believes that a decision taken by the Authority was either outside the authority given to the Authority by the Contract or that the decision was wrongly taken, the decision shall be referred to the Adjudicator within 14 days of the notification of the Authority's decision.

23. Procedure for Disputes

23.1. The Adjudicator shall give a decision in writing within 28 days of receipt of a notification of a dispute.

23.2. The Adjudicator shall be paid daily at the rates specified in the contract data together with reimbursable expenses of the type specified in the contract data and cost shall be divided equally between the Authority and the Contractor, whatever the decision is reached by the Adjudicator. Either party may refer a decision of the Adjudicator to an Arbitrator within 30 days of the Adjudicator's written decision. If neither party refers the dispute to the Arbitration within the above 30 days, the Adjudicator's will be final and binding.

23.3. The Arbitration shall be conducted in accordance with the arbitration published by the Government of Tamil Nadu and in the place shown in the conditions of the contract.

24. Replacement of adjudicator.

Should the Adjudicator resign or die, or should the Authority and the Contractor agree that the Adjudicator is not functioning in Accordance with the provisions of the contract; a new Adjudicator will be jointly appointed by the Authority and the Contractor. In case of disagreement between the Authority and the Contractor, within 30 days, the Adjudicator shall be designated by the Appointing Authority, designated in the contract data at the request of either party, within 14 days of receipt of such request.

B. TIME CONTROL

25. Program

25.1 Within the time stated in the Contract Data, the Contractor shall submit to the Authority for approval a Program showing the general methods, arrangements, order, and timing for all the activities in the works.

25.2 If the delay is due to the failure attributable to the contractor, the Authority l have the powers to decide whether to grant extension or not on the request for extension or time from the contractor. If the extension is granted under such circumstances, the contractor shall not be paid any revised rates or extra rates due to extension of time. The quoted rates in the contract shall prevail during the extension period. The

contractor shall have to pay liquidated damages as per contract date for the beyond extended period.

25.3 An update of the program shall be a program showing the actual progress achieved on each activity and the effect of the progress achieved on the timing of the remaining work, including any changes to the sequences of the activities.

25.4. The contractor shall submit to the Authority for approval an updated Program at intervals no longer than the period stated in the contract data. If the Contractor does not submit an updated program within this period, the Authority may withhold the amount stated in the Contract Data from the next payment certificate and continue to withhold this amount until the next payment after the date on which the overdue Program has been submitted.

25.5. The Authority's approval of the program shall not alter the Contractors' obligations. The contractor may revise the program and submit it to the Authority again at any time. A revised Program shall show the effect of Variations and Compensation events.

26. Extension of the intended completion date.

26.1 If the delay is due to the failure attributable to the contractor, the Authority l have the powers to decide whether to grant extension or not on the request for extension or time from the contractor. If the extension is granted under such circumstances, the contractor shall not be paid any revised rates or extra rates due to extension of time. The quoted rates in the contract shall prevail during the extension period. The contractor shall have to pay liquidated damages as per contract date for the beyond extended period.

26.2 If the delay is due to the failure attributable to the department or due to force, the Authority shall have the power to decide whether extension of time is to be given or not on request from the contractor of extension of time is given, the contractor shall not be paid extra rate or revised rate due to extension of time. The quoted rates in the contract shall prevail during extension period. The contractor has to pay liquidated damages as per contract data for the beyond extended period.

27. Delays Ordered by the Authority

27.1 The Authority may instruct the Contractor to delay the start or progress of any activity within the Works.

27.2 Damages for Delays and Non Completion

If the contractor fails to complete the works within the period Specified in the Contract Data or within any extended time allowed by the Authority, due to failure attributable to the contractor, the contractor shall pay or allow the Corporation to levy the amount mentioned in the table below as liquidated and ascertained damages for every day beyond the said date or extended time as the case may be during which the works shall remain unfinished. Liquidated and ascertained damages will be levied at the rate of 0.05% (zero point zero five percentage) of the contract value of the work for each day. The total liquidated and ascertained damages will be levied up to a maximum of ***10 % (ten percentage)*** of the value of the contract and if the

contractor fails to complete the work even then, action will be taken to terminate the contract and execute the work at his risk and cost as per provisions of the general conditions of contract of T.N.B.P.

28. Management Meetings

28.1 Either the Authority or the Contractor may require the other to attend a management meeting. The business of a management meeting shall be to review the plans for remaining work and to deal with matters raised in accordance with the early intimation procedure.

28.2 The Authority shall record the business of management meetings and provide copies of the record to those attending the meeting and to the Authority. The responsibility of the parties for actions to be taken shall be decided by the Authority either at the management meeting or after the management meeting and stated in writing to all who attended the meeting.

29. Early Intimation

29.1. The Contractor shall intimate the Authority at the earliest opportunity of specific likely future events or circumstances that may adversely affect the quality of the work increase the Contract Price or delay the execution of the Works. The Authority may require the Contractor to provide an estimate of the expected effect of the future event or circumstance on the Contract Price and Completion Date. The estimate shall be provided by the Contractor as soon as reasonably possible.

29.2. The Contractor shall cooperate with the Authority in making and considering proposals for how the effect of such an event or circumstance can be avoided or reduced by anyone involved in the work and in carrying out any resulting instruction of the Authority

C. Quality Control

30. Identifying Defects

30.1. The Authority shall check the Contractor's work and notify the Contractor of any Defects that are found. Such checking shall not affect the Contractor's responsibilities. The Authority may instruct the Contractor to search for a Defect and to uncover and test any work that the Authority considers may have a Defect.

30.2. Tests

30.3. If the Authority instructs the Contractor to carry out a test not specified in the Specification to check whether any work has a Defect and the test shows that it does, or not the contractor shall pay for the test and any samples.

30.4 Correction of Defects

30.5. The Authority shall give notice to the Contractor of any Defects before the end of the Defects Liability Period, which begins at Completion, and is defined in the Contract Data. The Defects Liability Period shall be extended for as long as Defects remain to be corrected.

30.6. Every time notice of a Defect is given, the Contractor shall correct the notified Defect within the time framed by the Authority, the defects have to be rectified.

31. Uncorrected Defects

31.1. If the Contractor has not corrected a Defect within the time specified in the Authority notice, the Authority will assess the cost of having the Defect corrected, and the Contractor will have to pay this amount.

D. Cost Control

32. Bill of Quantities

32.1 The Bill of Quantities shall contain items for the construction, installation, testing, and commissioning work to be done by the Contractor.

33. Changes in the Quantities

33.1. Payment to the contractor will be made for the actual quantities only of the work, performed or materials furnished accordance with the contract, and Tender Accepting Authority shall be ordinarily permitted to vary the quantity finally ordered only to the extent of 25 % either way of requirement indicated in the tender documents. The payment will be made as per originally approved rate.

33.2 If requested by the Authority, the Contractor shall provide the Authority with a detailed cost breakdown of any rate in the Bill of Quantities.

34. Variations

34.1. All Variations shall be included in updated Programs produced by the Contractor.

34.2 Individual items can be varied to any extent till the overall variation is within ±25% of the contract price. Only when the variation exceeds ±25% of the overall contract price, the rates for such quantities of the items which caused such variation shall be mutually discussed and agreed to. The contractor shall have no claim on any items deleted from the scope of work and the employer may delete any items at its own discretion

35. Payments for Variations

35.1. In case of variation +25% of the BoQ to be executed at the same quoted rates. Beyond this, the work will be carried out based on mutually agreed rates . The Contractor shall provide the Authority with a quotation for carrying out the Variation when requested to do so by the Engineer In-charge. The Authority shall assess the quotation, which shall be given within seven days of the request or within any longer period stated by the Authority and before the Variation is ordered.

35.2 If the work in the Variation corresponds with an item description in the Bill of Quantities and if, in the opinion of the Authority, the quantity of work above the limit

stated in Sub-Clause 36.1 or the timing of its execution do not cause the cost per unit of quantity to change, the rate in the Bill of Quantities shall be used to calculate the value of the Variation. If the cost per unit of quantity changes, or if the nature or timing of the work in the Variation does not correspond with items in the Bill of Quantities, the quotation by the Contractor shall be in the form of new rates for the relevant items of work.

35.3 If the Contractor's quotation is unreasonable, the Authority may order the Variation and make a change to the Contract Price, which shall be based on the Authority own forecast of the effects of the Variation on the Contractor's costs.

35.4 If the Authority decides that the urgency of varying the work would prevent a quotation being given and considered without delaying the work, no quotation shall be given and the Variation shall be treated as a Compensation Event.

35.5 The Contractor shall not be entitled to additional payment for costs that could have been avoided by giving early intimation.

36. Cash Flow Forecasts

36.1 When the Program is updated, the Contractor shall provide the Authority with an updated cash flow forecast.

37. Payment Certificates

37.1 The Contractor shall submit to the Authority monthly statements of the estimated value of the work executed less the cumulative amount certified previously.

37.2 Payment will be made to the contractor under the certificates to be issued at reasonable frequent intervals by the Authority. Within fourteen days of the submission of each certificate an intermediate payment will be made of a sum equal to 90 percent of the value of the work, as so certified and the balance of 10 percent will be withheld and retained as a security for the due fulfillment of the contract. Under the certificate to be issued by the Authority on completion of the entire works, the contractor will receive the final payment of all the moneys due or payable to him under or by virtue of the contract except security deposit, provided there is no recovery from or forfeiture by the contractor to be made. No certificate of the Authority shall be considered conclusive evidence as to be sufficiency of any work or materials or correctness of measurements to which it relates, nor shall it relieve the contractor from his liabilities to make good defects as provided by the contract. The Contractor when applying for a certificate shall prepare a sufficiency certificate to the satisfaction of the Authority to enable the Authority or the Director of Projects to check the claim and issue the certificate.

37.3 The value of work executed shall be determined by the Authority

37.4 The value of work executed shall comprise the value of the quantities of the items in the Bill of Quantities completed.

37.5 The value of work executed shall include the valuation of Variations and Compensation Events.

37.6 The Authority may exclude any item certified in a previous certificate or reduce the proportion of any item previously certified in any certificate in the light of later information.

38. Payments

38.1. Payments shall be adjusted for deductions for advance payments, retention and other recoveries in terms of the contract and deduction at source of taxes as applicable under the law.

38.2 Miscellaneous items that are not covered in the BOQ of schedule-A and SoR of concerned department as stated in schedule-B shall be paid as per DSR 2016-17(CPWD), if the item is not covered in DSR 2016 (CPWD), then it will be paid as per TNPWD SoR 2016- 17. If the items are not covered in TNPWD SoR, then itt will be paid as per Southern Railways Schedule of Rates (SoR), DSR rates for Chennai, Last Approved Rate (LAR) of CMRL or other metros or market rates shall be referred to in the order mentioned above for payment on the basis of measurement recorded for the executed work. In case of payment by market rates, (+15 %) will be considered for overheads and profits.

38.3 Miscellaneous items that are neither covered in the **BoQ (Schedule-A**) nor covered under the schedule of rates of concerned department as per **Schedule-B**, their rates and quantum of work of such items needs to be approved by CMRL before commencing, in line with the provisions of contract.

39. **Tax**

39.1. The rates quoted by the contractor shall be deemed to be inclusive of the Goods and Service Tax (GST), Duties and other levies on materials that the contractor will have to pay for the performance of the contract, and the Authority will reform such duties in regard to reduction of taxes at source as per law applicable. Any variation in taxes, duties and levies during the currency of contract shall be borne by the contractor.

40. Currencies

40.1 All payments shall be made in Indian Rupees.

41. Price Adjustment

41.1 Deleted.

42. Retention

42.1 The Authority shall retain from each payment due to the Contractor the proportion stated in the Contract Data until Completion of the whole of the Works.

42.2 On completion of the whole of the Works, half the total amount retained shall be repaid to the Contractor and half when the Defects Liability Period has passed and the Authority has certified that all Defects notified by the Authority to the Contractor before the end of this period have been corrected.

42.3 On completion of the whole Works, the Contractor may substitute retention money with an “on demand” Bank guarantee.

43. Liquidated Damages

43.1 The Contractor shall pay liquidated damages to the Authority if he fails to execute and complete the work within the period of completion, at the rate per day stated in the Contract Data for each day that the Completion Date is later than the Intended Completion Date. The total amount of liquidated damages shall not exceed the amount defined in the Contract Data. The Authority may deduct liquidated damages from payments due to the Contractor. Payment of liquidated damages shall not affect the Contractor’s liabilities.

43.2 If the Intended Completion Date is extended after liquidated damages have been paid, the Authority shall correct any overpayment of liquidated damages by the Contractor by adjusting the next payment certificate. The Contractor shall be paid interest on the overpayment, calculated from the date of payment to the date of repayment, at the rates specified in Sub-Clause 41.1.

44. Advance Payment

44.1 Deleted

45. Securities.

45.1 The Performance Security shall be provided to the Authority not later than the date specified in the Letter of Acceptance and shall be issued in an amount and form specified in Clause 30 of ITB. The Performance Security shall be valid upto 28 days from the date of expiry of defect liability period mentioned in the Contract Data.

46. Secured Advance

46.1 The Authority shall make advance payments in respect of materials intended for but not yet incorporated in the works in accordance with the conditions stipulated in the contract data. The Contractor is not eligible for secured advance if he has already availed mobilization advance as per Clause 46.1.

E. Finishing the Contract

47. Completion

47.1 The Contractor shall request the Authority to issue a certificate of Completion of the Works, and the Authority will do so upon deciding that the work is completed.

48. Taking Over

48.1 The Authority shall take over the Site and the Works within seven days of the Authority issuing a certificate of Completion.

49. Final Account

49.1 The Contractor shall supply the Authority with a detailed account of the total amount that the Contractor considers payable under the Contract before the end of the Defects Liability Period. The Authority shall issue a Defects Liability Certificate and certify any final payment that is due to the Contractor within 56 days of receiving the Contractor's account if it is correct and complete. If it is not, the Authority shall issue within 56 days a schedule that states the scope of the corrections or additions that are necessary. If the Final Account is still unsatisfactory after it has been resubmitted, the Authority shall decide on the amount payable to the Contractor and issue a payment certificate.

50. Operating and Maintenance Manuals

50.1 "As built" Drawings and/or operating and maintenance manuals are required to be submitted to employer and the Contractor shall supply them by the dates stated in the Contract Data/as per the instructions of Engineer-In-charge..

50.2 If the Contractor does not supply the Drawings and/or manuals by the dates stated in the Contract Data, or they do not receive the Authority approval, the Authority shall withhold the amount stated in the Contract Data from payments due to the Contractor.

51. Termination

51.1 The Authority or the Contractor may terminate the Contract if the other party causes a fundamental breach of the Contract.

51.2 Fundamental breaches of Contract shall include, but shall not be limited to, the following:

(a) The Contractor stops work for 28 days when no stoppage of work is shown on the current Program and the stoppage has not been authorized by the Authority;

(b) The Authority instructs the Contractor to delay the progress of the Works, and the instruction is not withdrawn within 28 days;

(c) The Authority or the Contractor is made bankrupt or goes into liquidation other than for a reconstruction or amalgamation;

(d) A payment certified by the Authority is not paid by the Authority to the Contractor within 84 days of the date of the Authority certificate;

(e) The Authority gives Notice that failure to correct a particular Defect is a fundamental breach of Contract and the Contractor fails to correct it within a reasonable period of time determined by the Authority;

(f) The Contractor does not maintain a Security, which is required; and

(g) The Contractor has delayed the completion of the Works by the number of days for which the amount of liquidated damages upto a maximum of 10 % of the value of the Contract unless otherwise specified in the Contract Data.

(h) If the Contractor, in the judgment of the Authority has engaged in corrupt or fraudulent practices in competing for or in executing the Contract.

51.3 When either party to the Contract gives notice of a breach of Contract to the Authority for a cause other than those listed under Sub-Clause 57.2 above, the Authority shall decide whether the breach is fundamental or not.

51.4 Notwithstanding the above, the Authority may terminate the Contract for convenience.

51.5 If the Contract is terminated, the Contractor shall stop work immediately, make the Site safe and secure, and leave the Site as soon as reasonably possible.

52. Payment upon Termination

52.1 If the Contract is terminated because of a fundamental breach of Contract by the Contractor, the Authority shall issue a certificate, for the value of the work done and Materials ordered less advance payments received up to the date of the issue of the certificate less other recoveries due in terms of the contract less taxes to deducted at source as per applicable law and less the percentage to apply to the value of the work not completed, as indicated in the Contract Data. Additional Liquidated Damages shall not apply. If the total amount due to the Authority exceeds any payment due to the Contractor, the difference shall be a debt payable to the Authority.

52.2 If the Contract is terminated for the Authority convenience or because of a fundamental breach of Contract by the Authority, the Authority shall issue a certificate for the value of the work done, Materials ordered, the reasonable cost of removal of Equipment, repatriation of the Contractor's personnel employed solely on the Works, and the Contractor's costs of protecting and securing the Works, and less advance payments received up to the date of the certificate.

53. Property

53.1 All Materials on the Site, Plant, Equipment, Temporary Works, and Works shall be deemed to be the property of the Authority if the Contract is terminated because of the Contractor's default.

54. Release from Performance

54.1 If the Contract is frustrated by the outbreak of war or by any other event entirely outside the control of either the Authority or the Contractor, the Authority shall certify that the Contract has been frustrated. The Contractor shall make the Site safe and stop work as quickly as possible after receiving this certificate and shall be paid for all work carried out before receiving it and for any work carried out afterwards to which a commitment was made.

2. SPECIAL CONDITIONS OF CONTRACT

1. GENERAL

1.1 The following special conditions of contract shall supplement the conditions of contract. Whenever there is a conflict, the provision herein shall prevail over the conditions of contract and / or those elsewhere.

1.2 The numbers given under each sub head represents the clause No. in conditions of Contract.

1.3 The bidder shall inspect the site and quarries and satisfy himself about the availability of the quality and quantity of materials required for the work.

1.4 The contractor shall make his own arrangements to procure all materials required for the work.

1.5 The Contractor shall make his own arrangements for water supply required for the work, at his own cost.

1.6 The Contractor shall make his own arrangements to obtain electricity for consumption on the work, at his own cost.

2. LABOUR

The Contractor shall unless otherwise provided in the Contract, make his own arrangements for the engagement of all staff and labour, local or other, and for their payment, housing, feeding and transport.

The Contractor shall, if required by the Engineer in charge, deliver to the Contractor, a return in detail, in such form and at such intervals as the Engineer in charge may prescribe, showing the staff and the numbers of the several classes of labour from time to time employed by the Contractor on the site and such information, respecting Contractor's Equipment as the Engineer in charge may require.

3. COMPLIANCE WITH LABOUR REGULATIONS

During continuance of the contract, the Contractor and his subcontractors shall abide at all times by all existing labour enactments and rules made there under regulations, notifications and by laws of the State or Central Government or local authority and any other labour law (including rules), regulations, byelaws that may be passed or notification that may be issued under any labour law in future either by the State or the Central Government or the local authority. Some of the major laws that are applicable to construction industry are given below. The Contractor shall keep the Employer indemnified in case of any action is taken against the Employer by the competent authority on account of contravention of any of the provisions of any Act of rules made there under, regulations and notifications including amendments. If the

Employer is caused to pay or reimburse, such amounts as may be necessary to cause or observe, or for non-observance of the provisions stipulated in the notifications / byelaws / acts / rules / regulations including amendments, if any, on the part of the Contractor, the Engineer / Employer shall have the right to deduct any money due to the Contractor including his amount of performance security. Employer / Engineer shall also have right to recover from the Contractor any sum required or estimated to be required for making good the loss or damage suffered by the Employer.

The Employees of the Contractor and the subcontractor in no case shall be treated as the employees of the Employer at any point of time.

Some major Labour Laws applicable to Establishments engaged in Construction Work

a. ***Workmen Compensation Act 1923:***

b. ***Payments of Gratuity Act 1972:***

c. ***Employees P.F. and Miscellaneous Provisions Act 1952:***

d. ***Maternity Benefit Act 1951:***

e. ***Minimum Wages Act 1948:***

f. ***Payment of Wages Act 1936:***

g. ***Equal Remuneration Act 1979:***

h. ***Payment of Bonus Act 1989:***

i. ***Industrial Disputes Act 1974:***

j. ***Industrial Employment (Standing Orders) Act 1946:***

k. ***Trade Unions Act 1926:***

l. ***Child Labour (Prohibition and Regulation) Act 1986:***

m. ***Inter – State Migrant Workmen's (Regulation of Employment & Conditioning of Service) Act 1979:***

n. ***The Building and Other Construction Workmen (Regulation of Employment and Condition of Service) Act and the cess Act of 1996:***

o. ***Factories Act 1940:***

4. ***ARBITRATION*** (GCC Clause 24.3)

The procedure for arbitration will be as follows:

4.1 If either party is dissatisfied with the decision of the Adjudicator, the party concerned, may within thirty days after receiving the decision of the Adjudicator shall notify to the Director (Projects), of his intension to go in for arbitration. Within 30 days of receipt of notice from the Contractor/ Employer of his intention to refer

the dispute to arbitration the General Manager (Tracks & Elevated)shall send to the Contractor / Employer, a list of five officers of the rank of a Engineer-In-Charge or of a higher rank who are not connected with the work for selection and appointment of arbitrators.

4.2 In event of dispute or difference arising between the Employer and a contractor relating to any matter arising out of or connected with this agreement, such disputes or difference shall be settled in accordance with the Arbitration and Conciliation Act, 1996. The arbitration tribunal shall consist of 3 arbitrators, one each to be appointed by the Employer and the Contractor. The third Arbitrator shall be chosen by the two Arbitrators so appointed by the Parties and shall act as presiding arbitrator. In case of failure of the two arbitrators appointed by the parties to reach upon a consensus within a period of 30 days from the appointment of the arbitrator appointed subsequently, the presiding Arbitrator shall be appointed by the Indian Council of Arbitration.

4.3 If one of the portion fails to appoint its arbitrator in pursuance of sub- clauses above within 30 days after arbitrator by the other party, then the presiding Arbitrator shall be nominated by Indian Council of Arbitration shall appoint the arbitrator. A certified copy of the order of the President of the institution of Engineers (India).

4.4 Arbitration proceedings shall be held at Chennai, India, and the language of the arbitration proceedings and that of all documents and communications between the parties shall be English.

4.5 The decision of the majority of arbitrators shall be final and binding upon both parties. The cost and expenses of Arbitration proceedings will be paid as determined by the arbitral tribunal. However, these expenses incurred by each party in connection with the preparation, presentation, etc., of its proceedings as also the fees and expenses paid to the arbitrator appointed by such party or on its behalf shall be borne by each party itself.

4.6 In the event the value of the contract is up to Rs.5 Crores, the disputes or difference arising shall be referred to the Sole Arbitrator. The Sole Arbitrator should be appointed by agreement between the parties, failing such agreement, the appointing authority is the Indian Council of Arbitration.

4.7 Performance under the contract shall continue during the Arbitration proceedings and payments due to the contractor by the owners shall not be withheld, unless they are the subject matter of the arbitration proceedings such as, but not limited to matters related to quality of work.

4.8 Neither party is entitled to bring claim to arbitration unless the same is made before the expiration of 30 days after defect liability period.

5. Income Tax

During the course of contract period deductions of Income Tax shall be made as per the rule in the force of the gross amount of each bill or as directed by the Income Tax

department from time to time and such Income Tax amounts shall be remitted to Government of India.

6. Sales Tax

Valid Sales Tax Clearance or exemption certificate should be produced before the payment of final bill, otherwise the final payment to the contractor will be withheld.

7. Tests on Materials and Finished Item of Work

7.1 Charges for carrying out all the tests specified in specification on materials and finished item of works should be borne by the contractor.

7.2 Charges for carrying out all the tests other than those specified in specification on materials and finished item of work should be borne by the contractor / Employer as below:

a) If the materials / works pass the tests, the charges will be borne by the employer.

b) If the materials / works fail the tests, the charges will borne by the contractor.

7.3 The Contractor should establish a field laboratory at the work site to carry out all tests specified as well as not specified in the specification both for materials and finished items of work in the presence of the Engineer.

8. Payment

8.1 Payment for the work done by the contractor will be based on measurements recorded at various stages of the work by the Engineer or Officer authorized by the Engineer. The Contractor or his authorized agent or representative shall be present at the time of recording of each set of measurements and sign the measurement book or leveling field book in token of their acceptance.

8.2 If for any reason the Contractor or his authorized agent is not available, and the work is suspended by the Engineer to avoid recording of measurements in the absence of the Contractor or his authorized agent, the department shall not entertain any claim from the contractor for any loss incurred by him on this account. If the Contractor or his authorized agent or representative does not remain present at the time of such measurement may be taken in his absence and shall be deemed to be accepted by the Contractor.

8.3 Any amount due to the department from the Contractor arising out of the Contract will be received from the bills of the Contractor. If sufficient amount is not available in the bills the same will be recovered under Revenue Act or from the amount due to the Contractor under any other Contract

9. Extension of Time

Granting extension of time shall be governed as under:

9.1 If the delay is due to the failure attributable to the Contractor, the Engineer shall have powers to decide whether to grant extension or not on the request for attention of time from the Contractor. If the extension is granted under such circumstances,

the Contractor shall not be paid any revised rates or extra rate due to extension of time. The quoted rates in the contract shall prevail during the extension period. The Contractor has to pay liquidated damages as per contract data for the extended period.

9.2 For this fixed price contract, if the delay is due to failure attributable to the department, or due to force, the Engineer shall have the power to decide whether extension of time is to be given or not on request from the contractor. If extension of time is given, the contractor shall not be paid extra rate or revised rate due to extension of time. The quoted rates in the contract shall prevail during extension period.

10. Fundamental Breach of Contract:

The Contractor becoming insane or imprisoned shall be deemed as a fundamental Breach or Contract.

11. Extra Item of Works

Extra item of work shall not vitiate the contract. The contractor shall be bound to execute extra items of works as directed by the Engineers.

12. Employment of Project Manager and Other Key Personnel

Other Key Personnel as furnished in the Contract.

13. Contract Period

The contract period is continuous from start date to intended completion date including monsoon and non-monsoon seasons without any break.

14. Inconvenience to Public

The contractor shall not deposit materials at any site which will cause inconvenience to Public. The Engineer may direct the Contractor to remove such materials or may undertake the job at the cost of the Contractor.

15. House and Hutments

The Contractor should arrange to provide accommodation for his staff & Laborers he needs, at his own cost. The Contractor shall make his own arrangements for supply of food-grains and other provisions to his staff and laborers including controlled commodities. If women are employed in more than 50 at a place, the Contractor shall arrange the crèches at his own cost.

16. Water Supply

It is the responsibility of the Contractor to make his own arrangements for water supply and drainage for the work site, in his own cost. The distribution system measures for purification of water, shall be the responsibility of the Contractor and shall be accordance with rules and regulations of the Public Health Department. No compensation will be allowed to the Contractor in this account.

17. Watching and Lighting:

The Contractor shall in connection with the works, provide and maintain at his own cost all lights, guards, fencing and watching when and wherever necessary or required by the Engineer or Engineer's Representative, or by any duly constituted authority for the protection of the works, or for the safety and convenience of the public or others. The Contractor shall make his own arrangements to obtain electricity for consumption on the works at his own cost.

18 Construction Plant

The Contractor shall provide and install at his own cost all necessary construction tools and plant, equipment, machinery and shall use such methods and appliances for the performance of all the operations connected with the work emprised under the contract as will secure a satisfactory quality of work and rate of progress which will ensure the completion of the work within the time specified.

19. Reference Marks and Bench Marks

19.1 The basic central lines, reference points and bench marks will be fixed by the Department.

19.2 The Contractor shall establish at his own cost, at suitable points, additional reference lines and bench marks as may be necessary. The Contractor shall remain responsible for the sufficiency and accuracy and of all his bench marks and reference lines. He shall take precaution to see that the lines, points and bench marks fixed by the Department are not disturbed by his work and shall make good to any such damages.

20. Setting out Works

The Contractor shall be responsible for the correct setting out of all works at his cost. The Contractor shall execute the work true to alignment, grade and levels as shown in the drawings and as directed by the Engineer and shall check these at frequent intervals. The Contractor shall provide all facilities like labour and instruments, and shall co-operate with the departmental officers to check all alignments, grades, levels and dimensions, such checking shall not absolve the contractor of his own responsibility in maintaining the necessary of the work.

21. Use and Care of Site

The Contractor will be permitted to use without charge, the site and the lands shown for execution of work, labour, staff colonies, site offices, workshops or store and for related activities. The Contractor shall not commence any operation on such lands, except with the approval of the Engineer. If these lands are not adequate, the Contractor may have to make his own arrangements for additional lands at his own cost. The Contractor shall not demolish, remove or alter the structures, trees or other facilities on the site without prior approval of the Engineer.

The rubbish shall be removed from the site as it accumulates. All surface and soil drains shall be kept in a clean, sound and workmen like state. All the means of the Contractor's operations shall be cleared before returning them to the Department. The Contractor shall make good any damage or alteration made to property or land handed over to him before these are returned.

22. Protection of adjoining Premises

The Contractor shall protect adjoining sites against structural, decorative and other damages that could be caused by the execution of these works and make good at his cost any such damages.

23. Local Roads

In addition to the existing public roads, near the site of works and the roads constructed by the Government in the works area, the Contractor may construct and maintain additional roads as required at his own expenses and as per the directions of the Engineer.

24. Work during Night or Sundays and Holidays

No work shall be done on holidays or during nights without the written permission Engineer in charge and the Contractors shall comply with the provision of the Factories Act, if and so far, they are applicable.

The contractor shall give prior information to the Police Department, if necessary, for carrying out the work during night hours.

SECTION VI

CONTRACT DATA

The Employer is ***The General Manager (Tracks & Elevated)***

Chennai Metro Rail Limited (CMRL),

Admin Building, CMRL Depot,

Poonamallee High Road, Koyambedu,

***Chennai –600107, Tamil Nadu*.**

The Engineer in Charge is ***General Manager (Projects)***

The name and identification number of the Contract is _____

The adjudicator will be appointed

The Works consist of **Construction of Foot Over Bridge (FOB) with escalator and lifts at Alandur CMRL Metro Station and across GST Road at Km 12/6 of G.S.T Road including various utility shifting works.**

The commencement date shall be immediately from the date of issue of LoA.*.*

The Completion period for the whole of the Works shall be 0*8 (eight) months from the date of commencement.*

MILESTONE DATES

S. NO	Description of Work	Milestone I (3 Month from Start Date)	Milestone II (6 Months from Start Date)	Milestone III (8 Months from Start Date)
1	Structural work	40%	90%	100%
2	Footpath work	20%	70%	100%
3	Architectural & Finishing Works		20%	100%

The following documents also form part of the Contract: *[list documents]*

1. The Contractor shall submit a revised Program for the Works within fifteen days of delivery of the Letter of Acceptance.

2. The Site Possession Date shall be date of Site handing over

3. The Site is located at *Chennai*.

4. The Defects Liability Period is 5 years.

5. The insurance covers shall be as follows:

   (a) Insurance of the Works and of Plant and Materials.

(b) Insurance of Equipment
(c) Insurance of other property.
(d) The minimum cover for personal injury or death insurance
  (i) For the Contractor's employees is Rs.10 lakhs.
  (ii) For other people is Rs.10 lakhs.

6. The following events shall also be Compensation Events as per Section II Clause 36 of ITB.

7. The period between Program updates is 90 days. The amount to be withheld for late submission of an updated Program is Rs. 1,00,000/-

8. The language of the Contract documents is English.

The law that applies to the Contract is the law of Union of India.

9. Institution whose arbitration procedures shall be used: Indian Council of

Arbitration/ President of Institution of Engineers (India)

10. Fees and types of reimbursable expenses to be paid to the Adjudicator: Decided at the time of appointment of Adjudicator

11. Appointing Authority for the Adjudicator: Director (Projects), Chennai Metro Rail Limited (CMRL),

12. Arbitration will take place in accordance with *arbitration and conciliation act, 1996.*

13. The proportion of payments retained **is 2.5% (two point five percent.)**

14. The liquidated damages for the whole of the Works are 0.05% of the final Contract Price] per day. The maximum amount of liquidated damages for the whole of the Works is ten *percent (10%)* of the final Contract Price.

15. The Bonus for the whole of the Works is *NIL* per day. The maximum amount of Bonus for the whole of the Works is NIL percent of the final Contract Price.

16. The Performance Security shall be for the following minimum amounts equivalent as a percentage of the Contract Price:

(a) Bank Guarantee [7.5% of the contract amount].

The standard form(s) of Performance Security acceptable to the Employer shall be of the type presented in Section 2 Cl. 30 of ITB of the Bidding Documents.

17. The date by which operating and maintenance manuals are required is within 28 days of issue of certificate of completion of whole or section of the work, as the case may be.

*The date by which "as-built" drawings are required is within 28 days of issue of certificate of completion of whole or section of the work, as the case may be.

The amount to be withheld for failing to produce "as built" drawings and/or operating and maintenance manuals by the date required is *Rs.1,00,000/-*

SECTION VII

TECHNICAL SPECIFICATIONS

A. TECHNICAL SPECIFICATIONS

1. Earthwork

1.1 General

The excavation shall be carried out to correct lines and levels. This shall also include, where required, proper shoring to maintain excavations and also the furnishing, erecting and maintaining of substantial barricades around excavated areas and warning lamps at night. Rock excavated shall be stacked properly as approved by the Engineer-in-charge.

1.2 Clearing

The area to be excavated / filled shall be cleared of fences, trees, plants, logs, stumps, bush, vegetation, rubbish, slush, etc. and other objectionable matter. If any roots or stumps of trees are encountered during excavation, they shall also be removed. The material so removed shall be disposed off as approved by the Engineer-in-charge.

1.3 Excavation

Excavation for permanent work shall be taken out to such widths, lengths, depths and profiles as are shown on the approved drawings or such other lines and grades as may be agreed with the Engineer-in-charge Rough excavation shall be carried out to a depth of 150 mm above the final level. The balance shall be excavated with special care for identification of utility, if any, before excavation to the required depth.. Soft pockets shall be removed below the final level and extra excavation filled up with material as approved by the Engineer-in-charge. Should any excavation be taken below the specified elevations, the Contractor shall fill it up with concrete of the same class as in the foundation resting thereon, up to the required elevation at no cost to the department. Every precaution shall be taken to prevent slips. If slips occur, the slipped material shall be removed and the slope dressed to a modified stable slope.

1.4 Fill, Backfilling and Site Grading

1.4.1 General

All fill material shall be subject to the Engineer-in-charge’s approval. If any material is rejected by Engineer-in-charge, the Contractor shall remove the same forthwith from the site. Surplus fill material shall be deposited /disposed off as directed by Engineer-in-charge after the fill work is completed.

No earth-fill shall commence until surface water discharges and streams have been properly intercepted or otherwise dealt with to the approval of the Engineer-in-charge.

1.4.2 Material

To the extent available, selected surplus soil from excavations shall be used as backfill. Backfill material shall be free from lumps, organic or other foreign material. All lumps of earth shall be broken or removed unless otherwise stated. Where excavated material is mostly rock, the boulders shall be broken into pieces not larger than 150 mm size, mixed with properly graded fine material consisting of murrum or earth to fill the voids and the mixture used for filling. If fill material is required to be imported, the Contractor shall make arrangements to bring such material from outside borrow pits. The material and source shall be subject to the prior approval of the Engineer-in-charge. The approved borrow pit areas shall be cleared of all bushes, roots of trees, plants, rubbish, etc. Top soil containing foreign material shall be removed. The materials so removed shall be disposed of as directed by Engineer-in-charge. The Contractor shall provide the necessary access roads to borrow areas and maintain the same if such roads do not exist.

1.4.3 Filling in pits and trenches around foundations of structures, walls, etc.

The spaces around the foundations, structures, pits, trenches, etc., shall be cleared of all debris, and filled with earth in layers not exceeding 15 cm, each layer being watered, rammed and properly consolidated to the satisfaction of Engineer-in-charge. Earth shall be rammed with approved mechanical compaction machines. Usually no manual compaction shall be allowed unless the Engineer-in-Charge is satisfied that in some cases manual compaction by tampers cannot be avoided. The final backfill surface shall be trimmed and leveled to a proper profile to the approval of the Engineer-in-charge.

The filling shall be done after the concrete or masonry is fully set and done in such a manner as not to cause undue thrust on any part of the structure.

1.4.4 Plinth Filling

Plinth filling shall be carried out with approved material such as soil, sand or Murom as in layers not exceeding 15 cm watered and compacted with mechanical compaction machines. When filling reaches the finished level, the surface shall be flooded with water, unless otherwise directed, for at least 24 hours, allowed to dry and then the surface again compacted as specified above to avoid settlement at a later stage. The finished level of the filling shall be trimmed to the level/slope specified.

At some locations/ areas, it may not be possible to use rollers because of space restrictions, etc. The Contractor shall then be permitted to use pneumatic tampers, rammers, etc. and he shall ensure proper compaction.

1.4.5 Sand Filling in Plinth and Other Places

Where backfilling is required to be carried out with local sand it shall be clean, medium grained and free from impurities. The filled-in-sand shall be kept flooded with water for 24 hours to ensure maximum consolidation. The surface of the consolidated sand shall be dressed to required level or slope. Construction of floors or other structures on sand fill shall not be started until the Engineer-in-charge has inspected and approved the fill.

1.4.6 General Site Grading

Site grading shall be carried out as indicated in the approved drawings. Excavation shall be carried out as specified in the Department's Requirements. Filling and compaction shall be carried out as specified under relevant Clause and elsewhere unless otherwise indicated below.

If no compaction is called for, the fill may be deposited to the full height in one operation and leveled. If the fill has to be compacted, it shall be placed in layers not exceeding 150 mm and leveled uniformly and compacted as indicated in relevant Clause before the next layer is deposited.

To ensure that the fill has been compacted as specified, field and laboratory tests shall be carried out by the Contractor.

Field compaction tests shall be carried out in each layer of filling until the fill to the entire height has been completed. This shall hold good for embankments as well. The fill will be considered as incomplete if the desired compaction has not been obtained.

The Contractor shall protect the earth fill from being washed away by rain or damaged in any other way. If any slip occurs, the Contractor shall remove the affected material and make good the slip.

1.4.7 Fill Density

Unless otherwise specified the compaction, where so called for, shall comply with minimum 90% compaction by Standard Proctor at moisture content differing not more than 4% from the optimum moisture content. The Contractor shall demonstrate adequately by field and laboratory tests that the specified density has been obtained.

1.4.8 Timber Shoring

The provisions of relevant ISS shall apply.

2 Concrete

2.1 General

The Engineer-in-Charge shall have the right at all times to inspect all operations including the sources of materials, procurement, layout and storage of materials, the concrete batching and mixing equipment and the quality control system. Such an inspection shall be arranged and the *Engineer-in-Charge*'s approval obtained, prior to starting of concrete work. This shall, however, not relieve the Contractor of any of his responsibilities. All materials which do not conform to the Specifications shall be rejected.

Materials complying with codes/standards shall generally be used.

2.2 Materials

2.2.1 Cement

Unless otherwise called for by the Engineer-in-charge, cement shall be ordinary Portland cement conforming to IS: 2697, IS: 8112 or IS: 12269. Super Sulphated cement conforming to IS 6909 or super resistant Portland cement conforming to IS 12330 or Pozzolana Portland Cement conforming to IS 1489.

Sulphate resistant cement conforming to IS 12330 shall be used for all cement concrete works wherever necessary as directed by the Engineer-in-charge.

Only one type of cement shall be used in any one mix. The source of supply, type or brand of cement within the same structure or portion thereof shall not be changed without approval from the Engineer-In-Charge.

Cement which is not used within 90 days from its date of manufacture shall be tested at a laboratory approved by the Engineer-In-Charge and until the results of such tests are found satisfactory, it shall not be used in any work.

2.2.2 Aggregates (General)

It shall comply with requirement of IS 383 and as specified in IS 456-2000. Aggregates shall consist of naturally occurring stones (crushed or uncrushed), gravel and sand. They shall be chemically inert, strong, hard, clean, durable against weathering, of limited porosity, free from dust/slit/organic impurities/deleterious materials such as iron pyrites, cod, mica, slate, clay alkali, soft fragments, sea shells and conform to IS: 383. Aggregates such as slag, crushed over burnt bricks, bloated clay aggregates, sintered fly ash and tiles shall not be used.

Aggregates shall be washed and screened before use where necessary or if directed by the Engineer-in-Charge.

Aggregates containing reactive silica shall not be used.

Graded aggregate shall conform to I.S. specification.

2.2.3 Water

Water used for both mixing and curing shall conform to IS: 456-2000 and free from injurious amounts of oils, acids, alkalis, salts, sugar, organic materials that may be deleterious to concrete or steel.

Potable water is generally considered satisfactory for mixing concrete. As a guide the following concentrations represent the maximum permissible values:

a) To neutralize 100 ml sample of water, using phenolphthalein as an indicator, it should not require more than 5ml of 0.02 normal NaOH. The details of test are given in 8.1 of IS 3025 (Part 22).
b) To neutralize 100 ml sample of water, using mixed indicator, it should not require more than 2 ml of 0.02 normal H_2SO_4. The details of test shall be as given in 8 of IS 3025 (Part 23).
c) Permissible limits for solids shall be as liven in Table 1 of IS: 456-2000.

In case of doubt regarding development of strength the suitability of water for making concrete shall be ascertained by the compressive strength and initial setting time tests specified in 2.2.3.2 and 2.2.3.3.

2.2.3.1 The sample of water taken for testing, shall represent the water proposed to be used for concreting, due account being paid to seasonal variation. The sample shall not receive any treatment before testing, other than that envisaged in the regular supply of

water proposed for use in concrete. The sample shall be stored in a clean container previously rinsed out with similar water.

2.2.3.2 Average 28 days compressive strength of at least three 150mm concrete cubes prepared with water proposed to be used shall not be less than 90 percent of the average of strength of three similar concrete cubes prepared with distilled water, The cubes shall be prepared, cured and tested in accordance with the requirements of IS 516.

2.2.3.3 The initial setting time of test block made with the appropriate cement and the water proposed to be used shall not be less than 30 min and shall not differ by±30min from the initial setting time of control test block prepared with the lame cement and distilled water. The test blocks shall be prepared and tested in accordance with the requirements of IS 4031 (Part 5).

The pH value of water shall be not less than 6.

Mixing or curing of concrete with sea water is not recommended because of presence of harmful salt in water. Under unavoidable Circumstance sea water may be used for mixing or curing in plain concrete with no embedded steel after having given due consideration to possible disadvantages and precautions including use of appropriate cement system.

Water found satisfactory for mixing is also suitable for curing concrete. However, water used for curing should not produce any objectionable stain or unsightly deposit on the concrete surface. The presence of tannic acid or iron compounds is objectionable

2.2.4 Reinforcement

Reinforcement shall be any of the following:

a) Mild Steel and medium tensile bars to IS 432 Part 1.

b) High strength deformed bars and wires to IS 1786.

c) Rolled steel Grade A made from structural steel to IS 2062.

All reinforcement shall be free from loose mill scales, loose rust and coats of paints, oil, mud or other coatings, which may destroy or reduce bond.

2.2.5 Admixtures

Admixtures may be used in concrete as per manufacturer’s instructions only with the approval of the Engineer-in-Charge. Accelerating, retarding, water reducing and air entraining admixtures shall conform to IS: 9103 and integral water proofing admixtures to IS: 2645.

2.2.6 Samples and Tests

All materials used for the works shall be tested before use.

Sampling and testing shall be as per IS: 2386 under the supervision of the Engineer-in-Charge.

The Contractor shall furnish manufacturer's test certificates and technical literature for the admixture proposed to be used. If directed, the admixture shall be got tested at an approved laboratory at no extra cost.

2.3 Design Mix Concrete

For Design Mix Concrete, the mix shall be designed according to IS: 10262 and SP 23 to provide the grade of concrete having the required workability and characteristic strength not less than appropriate values given in IS: 456. The minimum cement content for Design Mix Concrete shall be as per IS: 456.

The minimum cement content stipulated above shall be adopted irrespective of whether the Contractor achieves the desired strength with less quantity of cement. It shall be the Contractor's sole responsibility to carry out the mix designs at his own cost. He shall furnish to the Engineer-in-Charge at least 30 days before concreting operations, a statement of proportions proposed to be used for the various concrete mixes and the strength results obtained. The strength requirements of the concrete mixes ascertained on 150 mm cubes as per IS: 516 shall comply with the requirements of IS: 456.

Grades lower than M20 shall not be used for reinforced concrete (general) grading lower than M25 shall not be used for reinforced concrete in liquid retaining structures.

b) Batching & Mixing of Concrete

Proportions of aggregates and cement, as decided by the concrete mix design, shall be by weight. These proportions shall be maintained during subsequent concrete batching by means of weigh batchers capable of controlling the weights within one percent of the desired value.

2.4 Nominal Mix Concrete

Mix Design & Testing

Mix Designing and preliminary tests are not necessary for Nominal Mix Concrete. However, works tests shall be carried out as per IS: 456.

Mixing

Concrete shall be mixed in a mechanical mixer conforming to IS 1791. The mixing shall be continued until there is uniform distribution of materials and the mass is uniform in colour and consistency. If there is segregation after unloading, the concrete should be remixed.

2.5 Formwork

Formwork shall be all inclusive and shall consist of but not be limited to shores, bracings, sides of footings, walls, beams and columns, bottom of slabs etc. including ties, anchors, hangers, inserts, false work, wedges etc.

The design and engineering of the formwork as well as its construction shall the responsibility of the contractor; however, if so desired by the Engineer-in-Charge, the drawings and calculations for the design of the formwork shall be submitted to the Engineer-in-Charge for the approval.

Formwork shall be designed to fulfill the following requirements:

a) Sufficiently rigid and tight to prevent loss of grout or mortar from the concrete at all stages and appropriate to the methods of placing and compacting.

b) Made of suitable materials.

c) Capable of providing concrete of the correct shape and surface finish within the specified tolerance limits.

d) Capable of withstanding without deflection the worst combination of self weight, reinforcement and concrete weight, all loads and dynamic effects arising from construction and compacting activities, wind and weather forces.

e) Capable of easy striking out without shock, disturbance or damage to the concrete.

f) Soffit forms capable of imparting a camber if required

g) Soffit forms and supports capable of being left in position if required

h) Capable of being cleaned and/or coated if necessary immediately prior to casting the concrete; design temporary openings where necessary for these purposes and to facilitate and the preparation of construction joints.

The faces of formwork coming in contact with concrete shall be cleaned and two coats of approved mould oil applied before fixing reinforcement. Forms that have deteriorated shall not be used. Before reuse, all forms shall be thoroughly scraped, cleaned, nails removed, holes suitably plugged, joints repaired and warped lumber replaced to the satisfaction of the Engineer-in-Charge.

Wire ties passing through beams, columns and walls shall not be allowed. In their place bolts passing through sleeves shall be used. Formwork spacers left in-situ shall not impair the desired appearance or durability of the structure by causing spalling, rust staining or allowing the passage of moisture.

Formwork showing excessive distortion, during any stage of construction, shall be repositioned and strengthened. Placed concrete affected by faulty formwork, shall be entirely removed and formwork corrected prior to placement of new concrete at Contractor's cost.

2.6 Transporting, Placing and Compacting Concrete

Concrete shall be transported from the mixing plant to the formwork with minimum time lapse by methods that shall maintain the required workability and will prevent segregation, loss of any ingredients or ingress of foreign matter or water.

In all cases concrete shall be deposited as nearly as practicable directly in its final position to avoid re-handling. To avoid segregation, concrete shall not be re-handled or caused to flow. For locations where direct placement is not possible and in narrow forms and Contractor shall provide suitable drops and “Elephant Trunks”. Concrete shall not be dropped from a height of more than 1.0 m. Care shall be taken to avoid displacement of reinforcement or formwork.

Concrete shall not be placed in flowing water. Under water, concrete shall be placed in position by tremies or by pipeline from the mixer and shall never be allowed to fall freely through the water.

While placing concrete the Contractor shall proceed as specified below and also ensure the following:

a) Continuously between construction joints and pre-determined abutments.

b) Without disturbance to forms or reinforcement

c) Without disturbance to pipes, ducts, fixings and the like to be cast in; ensure that such items are securely fixed. Ensure that concrete cannot enter open ends of pipes and conduits etc.

d) Without dropping in a manner that could cause segregation or shock.

e) In deep pours only when the concrete and formwork designed for this purpose and by using suitable chutes or pipes.

f) Do not place if the workability is such that full compaction cannot be achieved

g) Without disturbing the unsupported sides of excavations; prevent contamination of concrete with earth. Provide sheeting if necessary in supported excavations, withdraw the linings progressively as concrete is placed.

h) If placed directly onto hardcore or any other porous material, dampen the surface to reduce loss of water from the concrete.

i) Ensure that there is no damage or displacement to sheet membranes.

j) Record the time and location of placing structural concrete.

Concrete shall normally be compacted in its final position within thirty minutes of leaving the mixer. Concrete shall be compacted during placing with approved vibrating equipment without causing segregation until it forms a solid mass free from voids thoroughly worked around reinforcement and embedded fixtures and into all corners of the formwork. When placing concrete in layers advancing horizontally, care shall be taken to ensure adequate vibration, blending and melding of the concrete between successive layers.

2.7 Curing

Curing and protection shall start immediately after the compaction of the concrete to protect it from

1. Premature drying out, particularly by solar radiation and wind;

2. leaching out by rain and flowing water;

3. high internal thermal gradient;

4. vibration and impact which may disrupt the concrete and interfere with its bond to the reinforcement

5. After the concrete has begun to harden i.e. 1 to 2 hr. after laying curing shall be started.

6. All concrete, unless approved otherwise by the Engineer-in-Charge, shall be cured by use of continuous sprays or ponded water or continuously saturated coverings of sacking, canvas, or other absorbent material for the period of complete hydration with a minimum of 7 days. The quality of curing water shall be the same as that used for mixing.

7. Where a curing membrane is approved to be used by the Engineer-in-Charge, the same shall of a non-wax base and shall not impair the concrete finish in any manner. The curing compound to be used shall be approved by the Engineer-in-Charge before use and shall be applied with spraying equipment capable of a smooth, even textured coat.

8. When concrete is used as sub-grade for flooring, the flooring may be commenced before the curing period of sub-grade is over, but curing of sub-grade shall be continued along with the top layer of flooring for a minimum period of 7 days.

9. Curing may also be done by covering the surface with an impermeable material such as polyethylene, which shall be well sealed and fastened.

2.8 Construction Joints and Keys

The position and arrangement of construction joints shall be as indicated by the contractor in his working drawings duly approved by the department. Concrete shall be placed without interruption until completion of work between construction joints. If stopping of concreting becomes unavoidable anywhere, a properly formed construction joint shall be made with the approval of the Engineer-in-Charge.

2.9 Repair and Replacement of Unsatisfactory Concrete

Immediately after the shuttering is removed, all defective areas such as honey-combed surfaces, rough patches, holes left by form bolts etc, shall be inspected by the Engineer-in-Charge who may permit patching of the defective areas or reject the concrete work.

All through holes for shuttering shall be filled for full depth and neatly plugged flush with surface.

Rejected concrete shall be removed and replaced by the Contractor at no additional cost to the Employer.

For patching of defective areas all loose materials shall be removed and the surface shall be prepared as approved by the Engineer-in-Charge.

The decision of the Engineer-in-Charge as to the method of repairs to be adopted shall be final and binding on the Contractor.

2.10 Hot Weather Requirements

Concreting during hot weather shall be carried out as per IS 7861 (Part I).

Adequate provision shall be made to lower concrete temperatures which shall not exceed 40 deg C at time of placement of fresh concrete.

For major and large scale concreting works the temperature of concrete at times of mixing and placing, the thermal conductivity of the formwork and its insulation and stripping period shall be closely monitored.

3 Structural Steel Work

3.1 Fabrication

3.1.1 General

As much fabrication work as is reasonably practicable work shall be completed in shops, where steel work is fabricated.

All workmanship and finish shall be of the best quality and shall conform to the best approved method of fabrication. All materials shall be finished straight and shall be machined/ground smooth true and square where so specified. All holes and edges shall be free of burrs. Shearing and chipping shall be neatly and accurately done and all portions of work exposed to view shall be neatly finished. Tolerances for fabrication of steel structures conform IS 7215. Tolerances for erection of steel structures shall conform to IS 12843.

3.1.2 Welding

Welding shall be in accordance with IS 816, IS 819, IS 1024, IS 1261, IS 1323 and IS 9595 as appropriate.

3.2 Site Erection

3.2.1 Plant and Equipment

The suitability and capacity of all plant and equipment used for erection shall be to the satisfaction of the EIC.

3.2.2 Storing and Handling

All structural steel should be so stored and handled at the site that the members are not subject to excessive stresses and damage.

3.2.3 Setting Out

The positioning and leveling of all steelwork, the plumbing of stanchions and the placing of every part of the structure with accuracy shall be in accordance with approved drawings and to the satisfaction of EIC.

3.2.4 Security during Erection

Safety precaution during erection shall conform to IS 7205:1974. During erection, the steel work shall be securely bolted or otherwise fastened and, when necessary, temporarily braced to provide for all load to be carried by the structure during erection including those due to erection equipment and its operation.

No riveting, permanent bolting or welding should be done until proper alignment has been obtained.

3.2.5 Field Connections

All field assembly by bolts, rivets and welding shall be executed in accordance with the requirements of shop fabrication excepting such as manifestly apply to shop conditions only. Where the steel has been delivered painted, the paint shall be removed before field welding, for a distance of 50 mm at least on either side of the joint.

3.3 Painting

All fabricated steel material, except those galvanised shall receive protective paint coating as prescribed in IS 1477 Parts 1 & 2.

Parts to be encased on concrete shall not be painted or oiled.

4. Brickwork

4.1 Materials

Bricks used in the works shall conform to the requirements laid down in IS: 1077, IS 2180, IS 2222, IS 2691, IS 3952, IS 6165. The class of the bricks shall be as specifically indicated in the respective items of work prepared by the Contractor.

4.2 Compressive Strength:

Five bricks shall be tested. The average compressive strength shall be as per class designation. The compressive strength of individual brick shall not be less than 20 % of the specified value.

4.2.1 Classification of burnt clay solid bricks

The classes and sub-classes of burnt clay solid bricks shall be as given in Table 1.

Table 1 – Classes of Burnt Clays Solid Bricks and their Principal requirements.

Type of Brick	Class designation (see more below)	Compressive strength kg/cm2 Min	Water absorption (24 hr. immersion percentage max.	Efflorescence

Type of Brick	Class designation (see more below)	Compressive strength kg/cm2 Min	Water absorption (24 hr. immersion percentage max.	Efflorescence
(1)	(2)	(3)	(4)	(5)
Heavy duty (See IS:2180-1970)	450	450	10	Nil
	400	400	10	Do
Common burnt clay building bricks (see IS: 1077-1970)	350	350	15	Slight
	300	300	15	Do
	250	250	15	Do
	200	200	15	Do
	175	175	15	Do
	150	150	15	Do
	125	125	20	Moderate
	100	100	20	Do
	75	75	20	Do
	50	50	20	Do

Note: Each class of bricks shall further be divided into sub-classes A, B, etc. based on the following:

Sub-class A – Tolerance limit shall be ± 3 percent and shall have smooth rectangular faces with sharp corners and emit clear ringing sound.

Sub-class B – Tolerance limit shall be ± 8 percent and shall be permitted to have slight distortion and round edges, provided no difficulty shall arise in laying of uniform courses.

4.2.2 Specification for burnt clay facing bricks

Classification

The facing bricks shall be of two classes:

(a) Class I; and

(b) Class II

4.2.3 General Quality

4.2.3.1 The facing bricks shall be made of clay, shale or mixture of these materials with or without admixtures and burnt to meet the requirements of this standard. The coloring material added to the clay shall be of suitable ceramic materials and shall be well distributed throughout the body. The brick shall be of uniform colour.

4.2.3.2 The bricks shall be free from cracks, flaws and nodules of free lime and of even texture. These shall be thoroughly burnt and shall have plane rectangular faces with parallel sides and sharp straight right angled edges.

4.2.4 Dimensions and Tolerances

4.2.4.1 The standard sizes of the facing bricks shall be 19 x 9 x 9 cm and 19 x 9 x 4 cm.

4.2.4.2 The permissible tolerances shall be as under:

Dimensions	**Tolerances**	
Cm.	Class I Mm	Class I MM
19	± 3	± 5
9	± 2	± 3
4	± 1.5	± 2

4.2.5 Physical Requirements

4.2.5.1 The average compressive strength obtained in accordance with the procedure laid down in Table I of IS: 3495-1966 (Method of sampling and testing clay building bricks shall not be less than 75kg/cm2 for Class I.

4.2.5.2 The water absorption requirement when tested in accordance with the procedure laid down in Table 2 of IS: 3495-1966 for 24h immersion shall not exceed 15 percent.

4.2.5.3 When tested in accordance with the method specified in Table 3 of IS : 3495 – 1966 efflorescence requirements shall be 'Nil' for both classes.

4.2.5.4 When measured in accordance with the method specified in Table 4 of IS: 3495 – 1966 the warpage for both classes shall not exceed 2.5 mm.

4.3 Water absorption:

Five bricks shall be tested for water absorption and shall not exceed 20 % by weight upto class 12.5 & 15% by weight for higher classes.

4.4 Efflorescence:

Five bricks shall be tested for efflorescence. The efflorescence shall be 'nil' to ' moderate'

Sample bricks shall be submitted to the Engineer-in-Charge for approval and bricks supplied shall conform to approved samples. If demanded by Engineer-in-Charge, brick samples shall be got tested as per IS: 3495 by Contractor. Bricks rejected by Engineer-in-Charge shall be removed from the site of works within 24 hours.

4.5 Preparation of Mortar

Materials:

Water: Water used shall be clean and reasonably free from injurious or deleterious materials such as oils, acids, alkalis, salts. Sand for masonry mortars shall confirm to IS 2116

Mortars shall be prepared and tested as per IS 2250.

4.6 Workmanship

Workmanship of brick work shall conform to IS: 2212. All bricks shall be thoroughly soaked in clear water for at least one hour immediately before being laid. The cement mortar for brick masonry work shall be as specified in the respective item of work prepared by the Contractor.

All brickwork shall be plumb, square and true to dimensions shown.

Brickwork shall be kept constantly moist on all the faces for at least seven days after 24 hrs of laying. The arrangement for curing shall be got approved from the Engineer-in-Charge.

Double scaffolding having two sets of vertical supports shall be provided to facilitate execution of the masonry works. The scaffolding shall be designed adequately considering all the dead, live and possible impact loads to ensure safety of the workmen, in accordance with the requirements stipulated in IS: 2750 and IS: 3696 (Part - I). Scaffolding shall be properly maintained during the entire period of construction. Single scaffolding shall not be used on important works and will be permitted only in certain cases as decided by the Engineer-in-Charge. Where single scaffolding is adopted, only minimum number of holes, by omitting a header shall be left in the masonry for supporting horizontal scaffolding poles. All holes in the masonry shall be carefully made good before plastering/ pointing.

All brick work shall be built tightly against columns, floor slabs or other structural members.

To overcome the possibility of development of cracks in the brick masonry following measures shall be adopted.

For resting RCC slabs, the bearing surface of masonry wall shall be finished on top with 12 mm thick cement mortar 1:3 and provided with 2 layers of Kraft paper Grade 1 as per IS: 1397 or 2 layer of 50micron thick polyethylene sheets.

RCC/ steel beams resting on masonry wall shall be provided with reinforced concrete bed blocks of 150 mm thickness, projecting 150mm on either sides of the beam, duly finished on top with 2 layer of Kraft paper Grade 1 as per IS: 1397 or 2 layers of 50micron thick polyethylene sheets.

5. Random Rubble Masonry, in Foundation Plinth and Superstructure

5.1 Materials

Stones for the works shall be of the specified variety which are hard, durable, fine grained and uniform in colour (for superstructure work) free from defects like cracks, sand holes, patterns of soft / loose materials veins, other defects. Quality and work shall conform to the requirements specified in IS: 1597 (Part-I). The percentage of water absorption shall not exceed 5 percent as per test conducted in accordance with IS: 1124. The Contractor shall supply sample stones to the Engineer-in-Charge for approval. Stones shall be laid with its grains horizontal so that the load transmitted is always perpendicular to the natural bed.

Cement-stand mortar for stone masonry works shall be as per IS 2250.

5.2 Scaffolding

Type of scaffolding to be used shall be as specified in the section of brick masonry.

5.3 Workmanship

For all works below ground level the masonry shall be random rubble with ordinary quarry dressed stones for the hearting and selected quarry dress stones for the facing.

For all R.R. masonry in superstructure the masonry shall be well bonded, faced with hammer dressed stones with squared quoins at corners. The maximum thickness of joints shall not exceed 20 mm. All joints shall be completely filled with mortar. When plastering or pointing is not required to be done, the joints shall be struck flush and finished as the work proceeds. Otherwise, the joints shall be raked to a minimum depth of 20 mm by a raking tool during the progress of the work while the mortar is still green.

Green work shall be protected from rain by suitable covering. Masonry work shall be kept constantly moist on all the faces for a minimum period of seven days for proper curing of the joints.

6. Damp - Proof Course

6.1 Materials and Workmanship

All the walls in a building shall be provided with damp-proof course covering plinth to prevent water from rising up the wall. The damp-proof course shall run without a break throughout the length of the wall, even under the door or other opening. Damp-proof course shall consist of minimum 50mm thick cement concrete of 1:2:4 nominal mix with nominal reinforcement and approved water-proofing compound admixture conforming to IS: 2645 in proportion as directed by the manufacturer. Concrete shall be with 10mm down graded coarse aggregates.

7. Wood work in Doors, Windows, Ventilators & partitions

7.1 Materials

Timber shall be of the best quality conforming to IS 287, well seasoned by the suitable process before being planed to the required sizes. Flush door shutters of the solid core type with plywood face panel shall conform to IS: 2202 (Part-1)

Transparent sheet glass conform to the requirements of IS: 2835 or IS: 2553 (Part-1). Wired and figured glass shall be as per IS: 5437. Builder’s hardware for fittings and fixtures shall be of the best quality from approved manufacturers. Each wooden door shutter shall have a minimum of three hinges and two fastenings like tower bolt, handle and mortise lock etc. floor stoppers, handles, kick plates etc. shall also be provided. Each window shutter shall have minimum of 3 hinges and one fastening like tower bolt and one handle for opening and closing.

7.2 Workmanship

The workmanship and finish of wood work in doors, windows, ventilators and partitions shall be of a very high order. Contractor shall ensure that work is executed in a professional manner by skilled carpenters for good appearance, efficient and smooth operation of the shutters.

All works shall be executed as per the detailed Drawing prepared by the Contractor and approved by the Engineer-in-Charge.

The workmanship shall generally conform to the requirements specified in IS: 4021.

8. Steel Doors, Windows and Ventilators

8.1 Materials

Hot rolled steel sections for the fabrication of steel doors, windows and ventilators shall conform to IS: 7452 which are suitable for single glazing.

Pressed steel door frames for steel flush doors shall be out of 1.25mm thick mild steel sheets of profiles as per IS: 4351.

Transparent sheet glass shall conform to the requirements of IS: 2835. Wired and figured glass shall be as per IS: 5437.

Builder's hardware of fittings and fixtures shall be of the best quality from the approved manufacturers. Hot rolled sections shall confirm to IS 7452 Fire check doors shall conform to IS 3614 Part 1 & 2. Steel windows for industrial buildings shall confirm to IS 1361.

8.2 Workmanship

All steel doors, windows and ventilators shall be of the type as specified in the respective items of work prepared by the Contractor and of sizes as indicated in the Drawings prepared by the contractor. Steel doors, windows and ventilators shall conform to the requirements as stipulated in IS: 1038. Steel windows shall conform to IS: 1361 if so specified.

9. Cement Plastering Work

9.1 Materials

The proportions of the cement mortar for plastering shall be as per approved drawings and specifications. Cement and sand shall be mixed thoroughly in dry condition and then just enough water added to obtain a workable consistency. The quality of water and cement shall be as per relevant IS standards. The quality and grading of sand for plastering shall conform to IS: 1542. Any mortar which is partially set shall be rejected and removed forthwith from the site. Droppings of plaster shall not be re-used under any circumstances.

9.2 Workmanship

Preparation of surfaces and application of plaster finishes shall generally conform to the requirements specified in IS: 1661 and IS: 2402. Plastering operations shall not be commenced until installation of all fittings and fixtures such as door/ window panels, pipes, conduits etc. are completed. All joints in masonry shall be raked as the work proceeds to a depth of 10 mm / 20mm for brick/ stone masonry respectively with a tool made for the purpose when the mortar is still green. The masonry surface to be rendered shall be washed with clean water to remove all dirt, loose materials, etc., Concrete surfaces to be rendered shall be roughened suitably by hacking or bush hammering for proper adhesion of plaster and the surface shall be evenly wetted to provide the correct suction. The

masonry surfaces should not be too wet only damp at the time of plastering. The dampness shall be uniform to get uniform bond between the plaster and the masonry surface.

9.3 Interior & Exterior plain faced plaster

This plaster shall be laid in a single coat of specified thickness. The mortar shall be dashed against the prepared surface with a trowel. The dashing of the coat shall be done using a strong whipping motion at right angles to the face of the wall or it may be applied with a plaster machine. The coat shall be trowelled hard and tight forcing it to surface depressions to obtain a permanent bond and finished to smooth surface. Interior plaster shall be carried out on jambs, lintel and sill faces, etc. as shown in the drawing and as directed by the Engineer-in-Charge.

9.4 Plain Faced Ceiling plaster

This shall be applied in a single coat of specified thickness. Application of mortar shall be as stipulated in above paragraph.

For external plaster, the plastering operation shall be commenced from the top floor and carried downwards. For internal plaster, the plastering operations for the walls shall commence at the top and carried downwards. Plastering shall be carried out to the full length of the wall or to natural breaking points like doors/ windows etc. Ceiling plaster shall be completed first before commencing wall plastering.

10. Cement Pointing

10.1 Materials

The cement mortar for pointing shall be in the specified proportion. Sand shall conform to IS: 1542 and shall be free from clay, shale, loam, alkali and organic matter and shall be of sound, hard, clean and durable particles. Sand shall be approved by Engineer-in-Charge and if so directed it shall be washed/ screened to meet specification requirements.

10.2 Workmanship

Where pointing of joints in masonry work is specified, the joints shall be raked at least 15 mm/ 20 mm deep in brick/ stone masonry respectively as the work proceeds when the mortar is still green.

Any dust/ dirt in the raked joints shall be brushed out clean and the joints shall be washed with water. The joints shall be damp at the time of pointing. Mortar shall be filled into joints and well pressed with special steel trowels. The joint shall not be disturbed after it has once begun to set. The joints of the pointed work shall be neat. The lines shall be regular and uniform in breadth and the joints shall be raised, flat, sunk or ‘V’ as may be specified in the respective items of work. No false joints shall be allowed.

The work shall be kept moist for at-least 7 days after the pointing is completed.

11. Painting of Concrete, Masonry & Plastered Surfaces

11.1 Materials

All the materials shall be of the best quality from an approved manufacturer. Contractor shall obtain prior approval of the Engineer-in-Charge for the brand of manufacture and the colour/ shade. All materials shall be brought to the site of works in sealed containers.

11.2 Workmanship

The surfaces to be treated shall be prepared by thoroughly brushing them free from dirt, mortar droppings and any loose foreign materials. Surfaces shall be free from oil, grease and efflorescence. Efflorescence shall be removed only by dry brushing of the growth. Cracks shall be filled with Gypsum. Workmanship of painting shall generally conform to IS: 2395.

12. Painting & Polishing of Wood Work

12.1 Materials

1. Wood primer shall conform to IS: 3536
2. Filler shall conform to IS: 110
3. Varnish shall conform to IS: 337
4. French polish shall conform to IS: 348
5. Synthetic enamel paint conform to IS: 2932

All the materials shall be of the best quality from an approved manufacturer. Contractor shall obtain prior approval of the Engineer-in-Charge for the brand of manufacture and the colour/ shade. All materials shall be brought to the site of works in sealed containers.

12.2 Workmanship

The type of finish to be provided for woodwork of either painting or polishing, the number coats, etc. shall be as specified in the respective items of work to be prepared by the Contractor.

Painting shall be either by brushing or spraying. Contractor shall procure the appropriate quality of paint for this purpose as recommended by the manufacturer. The workmanship shall generally conform to the requirements of IS: 2338 (Part I).

13. Painting of Steel Work

13.1 Materials

1. Zinc chrome primer shall conform to IS: 2074
2. Synthetic enamel paint shall conform to IS: 2932
3. Aluminum paint shall conform to IS: 2339

All the materials shall be of the best quality from an approved manufacturer. Contractor shall obtain prior approval of the Engineer-in-Charge for the brand of manufacture and the colour/ shade. All the materials shall be brought to the site in sealed containers.

13.2 Workmanship

Painting work shall be carried out only on thoroughly dry surfaces. Painting shall be applied either by brushing or by spraying. Contractor shall procure the appropriate quality of paint for this purpose as recommended by the manufacturer. The workmanship shall generally conform to the requirement of IS: 1477 (Part 2).

IS No.	Title
	Construction Planning and Storage of Materials
4082:	Recommendation on stacking and storage of construction materials at site (first revision)
7969:	Safety code for handling and storage of building materials
	EARTHWORK
1498	Classification and identification of soils for general engineering purposes (first revision) (Amendments 2) (Reaffirmed)
3764: 1992	Excavation work - Code of safety (first revision)
4081	Safety code for blasting and related drilling operations
	FOUNDATIONS
269:	33 grade ordinary Portland cement.
432 (Part 1)	Mild steel and medium tensile steel bars and hard-drawn steel wire for concrete reinforcement: Part 1 Mild steel and medium tensile steel bars (third revision)
455	Portland slag cement
456	Code of practice for plain and reinforced concrete (Reaffirmed 2000)
1080: 1986	Code of practice for design and construction of shallow foundations on soils (other than raft, ring and shell)
1489 (Part 1)	Portland pozzolana cement: Part 1 Fly ash based
1489 (Part 2)	Portland pozzolana cement: Part 2 Calcined clay based
1786	High strength deformed steel bars and wires for concrete reinforcement
1904	Code of practice for design and construction of foundations in soils: General requirements
2062	Steel for general structural purposes
6909	Specification for supersulphated cement

IS No.	Title
8041	Rapid hardening Portland cement
12269	53 grade ordinary Portland cement.
SP 36 (Part 2) :1988	Compendium of Indian Standards on soil engineering: Part 2 Field testing
	MASONRY
	Part 1 Mortars
269	33 grade ordinary Portland cement
383	Coarse and fine aggregates from natural sources for concrete
455	Portland slag cement
456	Code of practice for plain and reinforced concrete
1344	Calcined clay pozzolana
1489 (Part 1)	Portland pozzolana cement: Part 1 Fly ash based
1489 (Part 2)	Portland pozzolana cement: Part 2 Calcined clay based
2250	Code of practice for preparation and use of masonry mortars
2720 (Parts 1 to 41)	Methods of test for soils
3812	Fly ash for use as pozzolana and admixture
6452	Specification for high alumina cement for structural use
6909	Specification for supersulphated cement
8041	Rapid hardening Portland cement
8043	Hydrophobic Portland cement
8112	43 grade ordinary Portland cement
12269	53 grade ordinary Portland cement
12600	Low heat Portland cement
SP 20 (S &T):	Handbook on masonry design and construction
SP 21 (S &T)	Summaries of Indian Standards for building materials
	Part 2 Brickwork
269	33 grade ordinary Portland cement

IS No.	Title
383	Coarse and fine aggregates from natural sources for concrete
455	Portland slag cement
456	Code of practice for plain and reinforced concrete
1489 (Part 1)	Portland pozzolana cement: Part 1 Fly ash based
1489 (Part 2)	Portland pozzolana cement: Part 2 Calcined clay based
2645	Integral cement waterproofing compounds
3812	Fly ash for use as pozzolana and admixture
5454	Methods of sampling of clay building bricks
6452	Specification for high alumina cement for structural use
4014 Part 1 & 2	Code of practice for steel tubular scaffolding
6909	Specification for supersulphated cement
8041	Rapid hardening Portland cement
8042	White Portland cement
8043	Hydrophobic Portland cement
8112	43 grade ordinary Portland cement
9103	Admixture for concrete
12269	53 grade ordinary Portland cement
12600	Low heat Portland cement
SP 20 (S &T)	Handbook on masonry design and construction
SP 21 (S &T)	Summaries of Indian Standards for building materials
1077	Common burnt clay building bricks
2212	Code of practice for brick work
3696 (Part 1)	Safety code of scaffolds and ladders: Part 1 Scaffolds
4014 (Part 2)	Code of practice for steel tabular scaffolding: Part 2 Safety regulations for scaffolding
SP 25 (S & T)	Handbook on caused and prevention of cracks in building
	Stonework

IS No.	Title
1123	Method of identification of natural building stones
1127	Recommendations for dimensions and workmanship of natural building stones for masonry work
1597 (Part 1)	Code of practice for construction of stone masonry: Part 1 Rubble stone masonry
2250	Code of practice for preparation and use of masonry mortars
3316	Specification for structural granite
3696 (Part 1)	Safety code of scaffolds and ladders: Part 1 Scaffolds
4101 (Part 1)	Code of practice for external facing and veneers: Part 1 Stone facing
SP 20 (S & T)	Handbook on masonry design and construction
SP 21 (S & T)	Summary of Indian Standards for building materials
	Plain and Reinforced Concrete
269	33 grade ordinary Portland cement
383	Coarse and fine aggregates from natural resources for concrete
432 (Part 1 & 2)	Mild steel and medium tensile steel bars and hard drawn steel wire for concrete reinforcement: Part 1 Mild steel and medium tensile steel bars. Part 2 Hard drawn steel wire
455	Portland slag cement
456	Code of practice for plain and reinforced concrete
516	Method of test for strength of concrete
650	Standard sand for testing of cement
3085	Method of test for permeability of cement mortar & concrete
9284	Method of test for abrasion resistance of concrete
5816	Method of test for splitting tensile strength of concrete cylinders
8142	Method of test for determining setting time of concrete by penetration resistance
12600	Low heat Portland cement masonry cement
3466	Masonry cement
3558	Code of practice immersion Vibrator for consolidating concrete

IS No.	Title
8042	White Portland cement
1343	Code of practice for Prestressed concrete
883	Design of structural timber in building - Code of practice
1199	Methods of sampling and analysis of concrete
1344	Calcined clay pozzolana
1489 (Part 1)	Portland pozzolana cement: Part 1 Fly ash based
1489 (Part 2)	Portland pozzolana cement: Part 2 Calcined clay based
1786	High strength deformed steel bars and wires for concrete reinforcement
1791	Batch type concrete mixers
1946	Code of practice for use of fixing devices in walls, ceilings and floors of solid construction
2062	Steel and general structural purposes
2386 (Part 1)	Methods of test for aggregates for concrete: Part 1 Particle size and shape
2386 (Part 2)	Methods of test for aggregates for concrete: Part 2 Estimation of deleterious materials and organic impurities
2386 (Part 3)	Methods of test for aggregates for concrete: Part 3 Specific gravity, density, voids, absorption and bulking
2386 (Part 4)	Methods of test for aggregates for concrete: Part 4 Mechanical properties
2386 (Part 5)	Methods of test for aggregates for concrete: Part 5 Soundness
2386 (Part 6)	Methods of test for aggregates for concrete: Part 6 Measuring mortar making properties of fine aggregates
2386 (Part 7)	Methods of test for aggregates for concrete: Part 7 Alkali aggregate reactivity
2386 (Part 8)	Methods of test for aggregates for concrete: Part 8 Petrographic examination
2502	Code of practice for bending and fixing of bars for concrete reinforcement
2505	Concrete vibrators - Immersion type - General requirements

IS No.	Title
2506	General requirements for screed board concrete vibrators
2514	Concrete vibrating tables
2751	Recommended practice for welding of mild steel plain and deformed bars for reinforced construction
3025	Methods of sampling and test (physical and chemical) for water used in industry
3812	Fly ash for use as pozzolana and admixture
4031 (Part 1)	Methods of physical tests for hydraulic cement: Part 1 Determination of fineness by dry sieving
4656	Form vibrators for concrete
4925	Concrete batching and mixing plant
4926	Ready mixed concrete
4990	Plywood for concrete shuttering work
6452	Specification for high alumina cement for structural use
6909	Specification for super sulphated cement
7861 (Part 1)	Code of practice for extreme weather concreting: Part 1 Recommended practice for hot weather concreting
8041	Rapid hardening Portland cement
8043	Hydrophobic Portland cement
8112	43 grade ordinary Portland cement
9012	Recommended practice for Concreting
9013	Method of making, curing and determining compressive strength of accelerated cured concrete test specimens
9103	Admixtures for concrete
10262	Recommended guidelines for concrete mix design
12269	53 Grade ordinary Portland Cement
13330	Sulphate resisting Portland Cement
12600	Low heat Portland cement

IS No.	Title
13311 (Part 1)	Non-destructive testing of concrete - Methods of test: Part 1 Ultrasonic pulse velocity
13311 (Part 2)	Non-destructive testing of concrete - Methods of test: Part 2 Rebound hammer
SP 23 (S & T)	Handbook on concrete mixes (based on Indian Standards)
SP 24 (S & T)	Explanatory handbook on Indian Standard Code for plain and reinforced concrete
SP 33 (S & T)	Handbook on timber engineering
SP 34 (S & T)	Handbook on concrete reinforcement and detailing
	White Washing, Colour Washing and Painting of Masonry, Concrete and Plaster Surfaces (Calcareous Surfaces)
44	Iron oxide pigments for paints
55	Ultramarine blue for paints
109	Ready mixed paint, brushing, priming, plaster to Indian Standard Colour No. 361 and 631 White and off white
133	Enamel, interior: (a) undercoating, (b) finishing
158	Ready mixed paint, brushing, bituminous, black lead-free, acid alkali and heat resisting
168	Ready mixed paint, air drying, for general purpose
427	Distemper, dry, colour as required
428	Distemper, oil emulsion, colour as required
2395 (Part 1)	Code of practice for painting concrete masonry and plaster surfaces: Part 1 Operation and workmanship
2395 (Part 2)	Code of practice for painting concrete masonry and plaster surfaces: Part 2 Schedule
2932	Enamel, synthetic, exterior (a) undertaking (b) finishing
2933	Enamel, exterior (a) undertaking (b) finishing
3384	Specification for bitumen primer for use in waterproofing and damp proofing
5410	Cement paint
5411 (Part 1)	Plastic emulsion paint: Part 1 for interior use

IS No.	Title
5411 (Part 2)	Plastic emulsion paint: Part 2 for exterior use
6278	Code of practice for whitewashing and colour washing
9862	Ready mixed paint, brushing, bituminous, black lead-free, acid alkali, water and chlorine resisting
	Painting, Varnishing and Allied Finishes (Wood and Metals)
102	Ready mixed paint, brushing, red lead, non settling, painting
110	Ready mixed paint, brushing, Grey filler, for enamels for use over primers
117	Ready mixed paint, brushing, finishing exterior, semi-gloss for general purposes to Indian Standard Colours No. 101 to 104, 169,174,216, 217, 219, 275, 278, 280,281, 283, 352 to 354, 358 to 365, 384 to 388, 397, 410, 442 to 444
124 (Part 3)	Ready mixed paint, brushing, finishing exterior, semi-gloss for general purposes: Part 3 (superseding IS 119)
127	Ready mixed paint, brushing, finishing exterior, semi-gloss for general purposes white
128	Ready mixed paint, brushing, finishing exterior, semi-gloss for general purposes black
133	Enamel, interior: (a) undercoating, (b) finishing
137	Ready mixed paint, brushing, matt or eggshell flat, finishing, interior to Indian Standard colour as required
144	Ready mixed paint, brushing, petrol resisting, air-drying, for interior painting of tanks and container, red oxide (colour unspecified)
158	Ready mixed paint, brushing, bituminous, black lead-free, acid alkali and heat resisting
198	Varnish gold size
207	Gate and shutter hooks and eyes
337	Varnish, finishing interior
348	French polish
401	Code of practice for preservation of timber
423	Plastic wood for joiners filter

IS No.	Title
524	Varnish, finishing, exterior, synthetic, air drying
525	Varnish, finishing, exterior and general purposes
1477 (Part 1)	Code of practice for painting of ferrous metals in buildings: Part 1 Pretreatment
1477 (Part 2)	Code of practice for painting of ferrous metals in buildings: Part 2 Painting
2338 (Part 1)	Code of practice for finishing of wood and wood based materials: Part 1 Operations and workmanship
2338 (Part 2)	Code of practice for finishing of wood and wood based materials: Part 2 Schedules
2339	Aluminum paint for general purposes, in dual container
2554 (Part 1&2)	Code of practice for painting of non ferrous metals in buildings
2524 (Part 1)	Code of Practice for painting of non-ferrous metals in buildings; Part 1 Pretreatment
2524 (Part 1)	Code of Practice for painting of non-ferrous metals in buildings; Part 2 Painting
2932	Enamel, synthetic, exterior (a) undertaking (b) finishing
2933	Enamel, exterior (a) undertaking (b) finishing
3531	Glossary of terms relating to corrosion of metals
3536	Ready mixed paint, brushing, wood primer, pink
3537	Ready mixed paint, finishing interior, for general purposes, to Indian Standard Colours No. 101, 216, 217, 219, 275, 281, 352, 353, 358 to 361, 363, 364, 388, 410, 442, 444, 628, 631, 632, 634, 693, 697, white and black
3539	Ready mixed paint, undercoating for use under oil finishes to Indian Standard Colours, as required
3585	Ready mixed paint, aluminum, brushing priming water resistant, for woodwork
SP 27 (S & T) 1987	Handbook on method of measurement of buildings works (first revision)

IS No.	Title
IS 1200 (Part 2) 1974	method of measurement of building and engineering works: Part2 concrete works (third revision) (Amendment No.2)
IS 1200 (Part 3) 1976	Method of measurement of building and civil engineering works: Part 3 brickwork (third revision)
IS 1200 (Part 4) 1976	Method of measurement of building and civil engineering works: Part 4 stone masonry (third revision)
IS 1200 (Part 5) 1982	Method of measurement of building and civil engineering works: Part 5 form work (third revision) (Amendment No.1)
IS 1200 (Part 6) 1974	Method of measurement of building and civil engineering works: Part 6 refractory work (second revision) (Amendment no.2)
IS 1200 (Part 7 1976	Method of measurement of building and civil engineering works: Part 7 hardware (second revision)
IS 1200 (Part 8) 1993	Method of measurement of building and civil engineering works: Part 8 steelwork and iron work (fourth revision)
IS 1200 (Part 9) 1973	Method of measurement of building and civil engineering works: Part 9 roof covering (including cladding) (second revision) (Amendment No.1)
IS 1200 (Part 10) 1973	Method of measurement of building and civil engineering works: Part 10 ceiling and linings (Second revision) (Amendment No.2)
IS 1200 (Part 11) 1977	Method of measurement of building and civil engineering works: Part 11 paving, floor finishes dado and skirting (third revision) (Amendment No.1)
IS 1200 (Part 12) 1976	Method of measurement of building and civil engineering works: Part 12 plastering and pointing (third revision)
IS 1200 (Part 13) 1994	Method of measurement of building and civil engineering works: Part 13 whitewashing, colour washing, distempering and painting of building surfaces (fifth revision)
IS 1200 (Part 14) 1984	Method of measurement of building and civil engineering works: Part 14 glazing (third revision)
IS 1200 (Part 15) 1987	Method of measurement of building and civil engineering works: Part 15 painting, polishing. varnishing etc (fourth revision)

IS No.	Title
IS 1200 (Part 16) 1979	Method of measurement of building and civil engineering works: Part 16 laying of water and sewer lines including appurtenant items (third revision)
IS 1200 (Part 17) 1985	Method of measurement of building and civil engineering works: Part 17 road work including air field pavements (third revision)
IS 1200 (Part 18) 1974	Method of measurement of building and civil engineering works: Part 18 demolition and dismantling (third revision)
IS 1200 (Part 19) 1981	Method of measurement of building and civil engineering works: Part 19 water supply, plumbing and drains (third revision)
IS 1200 (Part 20) 1981	Method of measurement of building and civil engineering works: Part 20 laying of gas and oil pipelines (third revision)
IS 1200 (Part 21) 1973	Method of measurement of building and civil engineering works: Part 21 wood-work and joinery (second revision) (Amendment No.1)
IS 1200 (Part 22) 1982	Method of measurement of building and civil engineering works: Part 22 materials
IS 1200 (Part 23) 1988	Method of measurement of building and civil engineering works: Part 23 piling (fourth revision)
IS 1200 (Part 24) 1983	Method of measurement of building and civil engineering works: Part 24 well foundations (third revision) (Amendment No.1)
IS 1200 (Part 25) 1971	Method of measurement of building and civil engineering works: Part 25 tunneling (second revision) (Amendment No.4)
IS 1200 (Part 26) 1987	Method of measurement of building and civil engineering works: Part 26 Acid resistant lining
IS 1200 (Part 27) 1992	Method of measurement of building and civil engineering works: Part 27 earthwork done by mechanical appliances.
IS 3861:2002	Method of measurement of plinth, carpet and rentable area of buildings (second revision) (Amendment No.3)
IS 1200 (Part 1) 1992	Method of measurement of building and civil engineering works: Part 1 earthwork (fourth revision)
IS 1200 (Part 28) 1992	Method of measurement of building and civil engineering works: Part 28 Sound insulation works

IS No.	Title
IS 875 (Part 1)	Code of practice for dead loads (other than earthquake) for Buildings & Structures.
IS 875 (Part 2)	Code of practice for Imposed loads
IS 875 (Part 3)	Code of practice for wind loads
IS 875 (Part 4)	Code of practice for snow loads
IS 875 (Part 5)	Code of practice for Special loads & combinations
IS 1893 (Part 1)-2002	Criteria for earthquake resistant design of structure.
IS 13920-1993	Ductile detailing of reinforced concrete structures subjected to seismic forces
IS 2911 (Part 4) 1985	Code of practice for design & Construction of pile foundation (Load Test on piles)
IS 2911 (Part 1)	Sec 2-1979 Code of practice for design & construction of pile foundations (Bored Cast-in Situ pile).
SP 34 (S&T) 1987	Handbook on Concrete reinforcement and detailing.
SP 22 (S&T) 1982	Explanatory handbook on codes for earthquake engineering (IS 4326:1976)
SP 7	National Building (Code-2005) of India.
SP 16 (S&T) 1980	Design aids for reinforced concrete to IS 456:1978
IS 1786:1985 & 2008	Specification for High Strength deformed steel bars and wires for concrete reinforcement (third revision) (superseding IS 1139-1966) (Amendment No.1)
SP 24 (S&T) 1983	Explanatory handbook on Indian Standard Code of practice for plain and reinforced concrete (IS 456:1978)

SECTION VIII

SCHEDULE – A

&

SCHEDULE – B

RATES AND APPROXIMATE QUANTITITES

SCHEDULE - A

SCHEDULE OF RATES AND APPROXIMATE QUANTITIES

(a) The quantities given here are those upon which the lump-sum tender cost of the work is based but they are subject to alternations, omissions, deductions or additions as provided for in the conditions of this contract and do not necessarily show the actual quantities of work to be done. The unit rates noted below are those governing payment for extras or deductions or omissions according to the conditions of the contract, as set forth in the Preliminary Specification of the CPWD/S.S.R.B/T.N.B.P. and other conditions or specifications of the contract.

(b) It is to be expressly understood that the measured work is to be taken net (not withstanding any custom or practice to the contrary) according to the actual quantities when in place and finished according to the drawings or as may be ordered from time to time by the Engineer-In-Charge/ Bridges and the cost calculated by measurement or weight at the respective prices, without any additional charge for any necessary or contingent works connected therewith. The rates quoted are for works IN SITU and complete in every respect.

Item No.	Probable quantity		Description of work	S.S.R.B/ T.N.B.P/ MoSRTH No.	Rate			Unit in words	Amount	
	Figures	Unit			Words	Figures			Figures	
			Separate sheet enclosed			Rs.	P.		Rs.	P.

Date ……..

Signature of the Bidder

Note – The Second Sub-division of this column (ie. column 3) is for entering description in words such as number, cubic meter, kg etc.

SCHEDULE - B

LIST OF DRAWINGS

LIST OF DRAWINGS			
Note – All drawings to be signed by the Contractor as well as the Officer entering into the contract			
Sl No.	**Drawing No.**	**Revision**	**Drawing Title**
1	IS - 1423 - HIG - AL - KM - 001	R7	Key map at Alandur Metro Station
2	IS - 1423 - HIG - AL - TOP-001	R7	Topographical Plan at Alandur Metro Station
3	IS - 1423 - HIG - AL - PL-001	R7	Plan of Foot over Bridge at Alandur Metro Station
4	IS - 1423 - HIG - AL - GAD- 001	R7	General Arrangement Drawing of Foot over Bridge at Alandur Metro Station
5	IS - 1423 - HIG - AL - SE - 001	R7	Details of Longitudinal Section 1-1 of Foot Over Bridge at Alandur Metro Station
6	IS - 1423 - HIG - AL - SE - 002	R7	Details of Longitudinal Section 1-1 of Foot Over Bridge at Alandur Metro Station
7	IS - 1423 - HIG - AL - SE - 003	R7	Details of Staircase Section 2-2 of Foot Over Bridge at Alandur Metro Station
8	IS - 1423 - HIG - AL - SE - 004	R7	Details of Staircase Section 2-2 of Foot Over Bridge at Alandur Metro Station
9	IS - 1423 - HIG - AL - SE - 005	R7	Details of Staircase Section 2-2 of Foot Over Bridge at Alandur Metro Station
10	IS - 1423 - HIG - AL - SE - 006	R7	Escalator, Side Elevation & Joint Details of Foot Over Bridge at Alandur Metro Station
11	IS - 1423 - HIG - AL - SE - 007	R7	Escalator, Side Elevation & Joint Details of Foot Over Bridge at Alandur Metro Station
12	IS - 1423 - HIG - AL - SE - 008	R7	Escalator, Side Elevation & Joint Details of Foot Over Bridge at Alandur Metro Station
13	IS - 1423 - HIG - AL - SE - 009	R7	Side Elevation Details of Foot Over Bridge at Alandur Metro Station
14	IS - 1423 - HIG - AL - SE - 010	R7	Elevation Details at Median Portion of Foot Over Bridge at Alandur Metro Station
15	IS - 1423 - HIG - AL - SE - 011	R7	Elevation Details at Median Portion of Foot Over Bridge at Alandur Metro Station
16	IS - 1423 - HIG - AL - SE - 012	R7	Side Elevation Details of Foot Over Bridge at Alandur Metro Station
17	IS - 1423 - HIG - AL - SE - 013	R7	Side Elevation Details of Foot Over Bridge at Alandur Metro Station
18	IS - 1423 - HIG - AL - SE - 014	R7	Tube Details of Foot Over Bridge at Alandur Metro Station
19	IS - 1423 - HIG - AL - SE - 015	R7	Foundation Layout of Foot Over Bridge at Alandur Metro Station
20	IS - 1423 - HIG - AL - SE - 016	R7	Foundation Layout of Foot Over Bridge at Alandur Metro Station
21	IS - 1423 - HIG - AL - SE - 017	R7	Foundation Layout of Foot Over Bridge at Alandur Metro Station
22	IS - 1423 - HIG - AL - SE - 018	R7	Top & Bottom Plan of Foot Over Bridge at Alandur Metro Station

LIST OF DRAWINGS			
Note – All drawings to be signed by the Contractor as well as the Officer entering into the contract			
Sl No.	**Drawing No.**	**Revision**	**Drawing Title**
23	IS - 1423 - HIG - AL - SE - 019	R7	Foundation Layout of Foot Over Bridge at Alandur Metro Station
24	IS - 1423 - HIG - AL - SE - 020	R7	Foundation Layout of Foot Over Bridge at Alandur Metro Station
25	IS - 1423 - HIG - AL - SE - 021	R7	Foundation Layout of Foot Over Bridge at Alandur Metro Station
26	IS - 1423 - HIG - AL - SE - 022	R7	Foundation Layout of Foot Over Bridge at Alandur Metro Station
27	IS - 1423 - HIG - AL -EL- 001	R7	ESCALATOR DETAILS (As provided by the Manufacturer)
28	IS - 1423 - HIG - AL -LD- 001	R7	LIFT DETAILS (As provided by the Manufacturer)
29	IS - 1423 - HIG - AL -EL -001	R7	Electrical Layout Plan
30	IS - 1423 - HIG - AL -EL -002	R7	Electrical Plan
31	IS - 1423 - HIG - AL -EL -003	R7	Power Distribution Scheme
32	IS - 1423 - HIG - AL -EL- 001	R7	Elevation of Foot Over Bridge at Alandur Metro Station (Option - 1)
33	IS - 1423 - HIG - AL -EL- 002	R7	Side Elevation of Foot Over Bridge at Alandur Metro Station (Option - 2)
34	IS - 1423 - HIG - AL -EL- 003	R7	Side Elevation of Foot Over Bridge at Alandur Metro Station (Option- 1)
35	IS - 1423 - HIG - AL -PL- 001	R7	Plan & Cross Section of Proposed Footpath
36	IS - 1423 - HIG - AL - UTY -001	R7	Utility Plan at Alandur Metro Station

Date ……Signature of the Bidder

SECTION IX

Security Forms

FORM OF ADVANCE PAYMENT GUARANTEE

(Bank Guarantee)

(On non-judicial stamp paper of the appropriate value in accordance with stamp Act. The stamp paper to be in the name of Executing Bank. The executing Bank shall be from a Scheduled Bank in India having a net worth of more than Rupees Five billion)

Ref.No…….. Date…….

Director (Projects),
Chennai Metro Rail Limited,
Admin Building, CMRL Depot,
Poonamallee High Road,
Koyambedu, Chennai –600107,
Tamil Nadu, India.

Dear Sir,

Reg: Bank Guarantee

In consideration of Chennai Metro Rail Limited (hereinafter referred to as the "Employer" which expression shall, unless repugnant to the context or meaning thereof include its successors, administrators and assigns), having awarded to …….. (Name of the Contractor) …… (hereinafter referred to as the "Contractors" which expression shall unless repugnant to the context or meaning thereof, include its successors, administrators, executors and assigns), a contract by issue of Employer's Contract Agreement dated …….. and the same having been unequivocally accepted by the Contractor resulting in a Contract valued at …… for Name of Work: …… (hereinafter called the "Contract") and the Employer having agreed to make (scope of work) an advance payment to the Contractors for performance of the above Contract amounting to …… (in words and figures) …… as an advance against Bank Guarantee to be furnished by the Contractors.

We, …… (Name of the Bank) ……, having its Head Office at (hereinafter referred to as the "Bank", which expression shall, unless repugnant to the context or meaning thereof, include its successors, administrators, executors and assigns), do hereby guarantee and undertake to pay the Employer immediately on demand and or, all monies payable by the Contractors to the extent of …… as aforesaid at any time up to ……. @* …… without any demur, reservation, contest, recourse or project and/or without any reference to the Contractors. Any such demand made by the Employer on the Bank shall be conclusive and binding notwithstanding any difference between the Employer and the Contractors or any dispute pending before any Court, Tribunal, Arbitrator or any other authority, we agree that the Guarantee herein contained shall be irrevocable and shall continue to be enforceable till the Employer discharges this guarantee.

The Employer shall have the fullest liberty without affecting any way the liability of the Bank under this guarantee, from time to time to vary the advance or to extend the time for performance of the Contract by the Contractors. The Employer shall have the fullest liberty

without affecting this guarantee, to postpone from time to time the exercise of any powers vested in them or of any right which they might have against the Employer and to exercise the same at any time in any manner, and either to enforce or to forebear to enforce any covenants, contained or implied, in the Contract between the Employer and the Contractors any other course or remedy or security available to the Employer. The Bank shall not be relieved of its obligations under these presents by any exercise by the Employer of its liberty with reference to the matters aforesaid or any of them or by reason of any other act of forbearance or other acts of omissions or commission on the part of the Employer or any other indulgence shown by the Employer or by any other matter or thing whatsoever which under law would but for this provision have the effect of relieving the Bank.

The Bank also agrees that the Employer at its option shall be entitled to enforce this Guarantee against the Bank as a principal debtor, in the first instance without proceeding against the Contractors and notwithstanding any security or other guarantee the Employer may have in relation to the Contractors liabilities.

Notwithstanding anything contained herein above our liability under this guarantee is limited to …… and it shall remain in force up to and including …… @* …… and shall be extended from time to time for such period (not exceeding one year), as may be desired by …… (Name of the Contractor) ……

Dated this …… day of …… 20… at ……

WITNESS ……..…….. (Signature) …… (Name) …… (Office Address)	 …… (Signature of authorized Bank Official) …… (Name) …… …… (Designation with Bank stamp) …….. Power of Attorney (To be enclosed) Power of Attorney No …….. Date ……

@ The date will be ninety (90) days after the date of completion of Contract.

FORM OF BID SECURITY (BANK GUARANTEE)

WHEREAS, …… (Name of Bidder) (hereinafter called “the Bidder”) has submitted his bid dated …….…… (Date) for the {Name of Work) …… hereinafter called “the Bid”).

KNOW ALL MEN by these presents that We ……..…… (Name of Bank) of …… (Name of Country) having our registered office at …… (hereinafter called “the Bank”) are bound unto ……(Name of Employer) (hereinafter called “the Employer”) in the sum of …… for which payment well and truly to be made to the said Employer the Bank binds himself, his successors and assigns by these presents.

SEALED with the Common Seal of the said Bank this …..…… day of …….... 20……..…

THE CONDITIONS of this obligation are:

(1) If the Bidder withdraws his Bid during the period of bid validity specified in the Form of Bid: or

(2) If the Bidder does not accept the correction of arithmetical errors of his bid price in accordance with the instruction to Bidders: or

(3) If the Bidder having been notified of the acceptance of his Bid by the Employer during the period of bid validity:

a. Fails or refuses to execute the Form of Agreement in accordance with the instructions to Bidders, if required: or

b. Fails or refuses to furnish the Performance Security, in accordance with the Instructions to Bidders; or

c. Fails or refuses to furnish the Domestic Preference Security, where required.

We undertake to pay to the Employer up to the above amount upon receipt of his first written demand, without the Employer having to substantiate his demand, provided that in his demand the Employer will note that the amount claimed by him is due to him owing to the occurrence of all of one or more of the above conditions, specifying the occurred condition or conditions.

This Guarantee will remain in force up to and including the date of 162 days after the deadline for submission of bids as such deadline is stated in the Instructions to Bidders or as it may be extended by the Employer, notice of which extension(s) to the Bank is hereby waived. Any demand in respect of this Guarantee should reach the Bank not later than the above date.

DATE……

SIGNATURE OF THE BANK……

Signature of Bidder **Page 123 of 261**

SEAL OF THE BANK……

SIGNATURE OF THE WITNESS……..

Name and address of the witness

Signature of Bidder

APPLICATION FORM (8)

(Filled up in a Rs.20/- stamp paper signed by notary public)

Litigation History

Name of Applicant:

_____

_____

The applicant should provide information on history of litigation or arbitration resulting from contracts completed or under execution in the last five years.

Year	Award for or AGAINST applicant	Name of Client Cause of Litigation and matter in dispute	Disputed amount (Current value in Indian Rs.)	Actual awarded amount in Indian Rs.

Signature of Bidder

APPLICATION FORM (9)

(Filled up in a Rs.20/- stamp paper signed by notary public)

INFORMATION REGARDING CURRENT LITIGATION DEBARRING/EXPELLING OF TENDERER OR ABANDONMENT OF WORK BY TENDERER

1. (a) Has the Applicants history of litigation awarded against him?

   Yes/No

   (b) If yes give details.

Yes/No

2. (a) Has the Applicant been debarred/ expelled by any Agency in India, during the last 5 years, excepting on account of reasons, other than non-performance.

   (b) If yes give details.

3. (a) Has the Applicant abandoned any contract work in India, during the last 5 years.

Yes/No

   (b) If yes, details

4. (a) Has the Applicant has been declared bankrupt during the last 5 years?

Yes/No

   (b) If yes, give details, including present status.

Note: If any information in this schedule is found to be incorrect or concealed, application will be summarily rejected.

APPLICATION FORM (10)

(Filled up in a Rs.20/- stamp paper signed by notary public)

AFFIDAVIT

I, the undersigned do hereby certify that all the statements made in the required attachments are true and correct.

The undersigned also hereby certifies that our firm M/s._____ have neither abandoned any work nor any contract awarded to us for such works have been rescinded for which the reasons were attributable to the non performance of our firm during last five years to the date of this bid.

The undersigned hereby authorize (s) and request(s) any bank person firm or corporation to furnish pertinent information deemed necessary and request by the Department to verify this statement or regarding my (our) competence and general reputation.

The undersigned understand and agrees that further qualifying information may be requested and agrees to furnish any such information at the request of the Department.

_____

(Signed by an Authorised Officer of the Firm)

_____

Title of Officer

_____

Name of Firm

_____

Date

Section X. Technical Specification

SAFETY CODE

1. First aid box appliances including adequate supply of sterilized dressings and cotton wool shall be kept in a readily accessible place.

2. An injured person shall be taken to a public hospital without loss of time, in cases where the injury necessitates hospitalization.

3. Suitable and strong scaffolds should be provided for workmen for all works that can safely be done from ground.

4. No portable single ladder shall be over 8 meters in length. The width between the side rails shall not be less than 30 cm. (clear) and the distance between two adjacent rungs shall not be more than 30 cm. When a ladder is used an extra mazdoor shall be engaged for holding the ladder.

5. The excavated material shall not be placed within 1.5 meters of the edge of the edge of the trench or half of the depth of trench whichever is more. All trenches and excavations shall be provided with necessary fencing and lighting.

6. A working platform should be provided with suitable means to prevent the fall of persons or materials by providing suitable fencing or railing whose minimum height shall be one metre.

7. No cantilever slab or other part of the structure shall be so overloaded with debris or materials as to render it unsafe.

8. Workers employed on mixing and handling material such as asphalt, cement mortar or concrete and lime mortar and chemicals shall be provided with protective footwear and rubber hand-gloves.

9. Those engaged in welding works shall be provided with welder's protective eye-shields and gloves.

10. (i) No paint containing lead products shall be used except in the form of paste or readymade paint.

    (ii) Suitable facemasks should be supplied for use by the workers when the paint is applied in the form of spray or surface having lead paint dry rubbed and scrapped.

11. Overalls shall be supplied by the Contractor to the painters and adequate facilities shall be provided to enable the working painters to wash during the periods of cessation of work.

12. Hoisting machines and tackles used in the works, including their attachments, anchorage and supports shall be in perfect condition and got approved from the consultants before its erection.

13. The ropes used in hosting or lowering material or as a means of supervision shall be of durable quality, adequate strength, free from defects and shall be duly approved by the consultants.

14. Cutting / drilling machine and other electrically operated equipments used at site shall be plugged into correctly rated electrical outlets with proper sockets.

15. Only ISI marked 3 pin plug and other appliances and equipments shall be used.

16. Electrical power cables/wires used shall not have any joints and shall be properly rated.

17. All electrical appliances i.e. welding, drilling, cutting machine etc. shall be safely and securely earthed to prevent leakage current while in operation.

18. Personal protective equipment's such as safety shoes, hand gloves, welder's mask, ear plug etc. depending upon the requirement of the work shall be provided by the contractor to the workmen to prevent occupational health hazards.

19. The safety belt shall be provided by the contractor and used by the workmen while working from height for more than 10' from Ground level.

20. None of the road area shall be used for stacking / dumping any kind of materials/waste.

21. Power supply shall be switched off from the mains when equipments are not in use.

22. Any debris generated from the work shall be collected on daily basis, removed from site and stored at the designated place in proper manner.

23. Battery operated emergency light/torches shall be provided by the contractor to the workmen while working beyond office hours.

24. In addition to the above contractor is to follow strictly the safety code provisions in the relevant IS code.

25. The debris generated in work shall not be stored on footpaths and any consequence if arising out of this shall be the responsibility of the contractor.

Section - X

Technical Specifications

1.0 PREAMBLE

1.1 The Technical Specification Contained herein shall be read in conjunction with the other Bidding Documents.

1.1.1 General

The Technical specifications covering the material and the workmanship aspects as well as method of measurements and payments are included in this section. These specifications cover the items of civil and non-civil works coming under scope of this document. All work shall be carried out in conformity with the same. These specifications are not intended to cover the minute details. The work shall be executed in accordance with good practices followed for achieving high standards of workmanship, thus ensuring safety and durability of the construction. All codes and standards referred to· in these specifications shall be the latest thereof, unless otherwise stated.

1.1.2 Inclusive Documents

The provisions of special conditions of contract, those specified elsewhere in the bid document, as well as bid drawings and notes, or other specifications issued in writing by the CMRL shall form part of the technical specification of this project.

1.1.3 The attention of the contractor is drawn to those clauses of codes which require supporting specification either by the Engineer-in-Charge or by 'Mutual' agreement between the 'supplier and purchaser'. In such cases, it is the responsibility of the bidder/ contractor to seek clarification on any uncertainty and obtain prior approval of the Engineer -in- Charge before taking up the supply/ construction. In absence of such prior clarification, the Engineer-in-Charge's choice/ design will be the final and binding on the contractor without involving separately any additional payment.

1.1.4 Measurement and Payment

The methods of measurement and payment shall be described under various items in the Bill of Quantities or technical specification. Where specific definitions are not given, the methods described in B.I.S. Codes will be followed. Should there be any detail of construction or material which has not been referred to in the Specification or in the Bill of quantities and Drawings but the necessity for which may be implied or inferred there from, or which is usual or essential to the completion of the work in the trades, the same shall be deemed to be included in the rates and prices entered by the contractor in the Bill of Quantities.

1.1.5 Defective Works

All the defective works are liable to be demolished, rebuilt and defective materials replaced by the contractor at his own cost. In the event of such works being accepted by carrying out repairs etc., as specified by the Engineer-in-Charge, the cost of repairs will be borne by the contractor.

1.2 Site Information

The information given hereunder and provided elsewhere in these documents is given in good faith by the Employer/ Engineer-in-Charge but the Contractor shall satisfy himself regarding all aspects of the conditions and no claim will be entertained on the plea that the information supplied by the Employer/ Engineer-in-Charge is erroneous or insufficient.

2.0 Technical Specifications

2.1 The work shall be executed as per the description of item, approved drawings & design and technical specifications. The Technical Specifications, in accordance with which the entire work described hereinafter shall be constructed and completed by the Contractor, shall comprise of the following:

A. Part - 1 General Technical Specifications: Latest editions of CPWD Specifications Volume - I & II along with other Addendum/ Corrigendum/ Revisions issued/ effected up to the last date of receipt of bid.

Latest editions of CPWD General-Specifications for Electrical Works Part I -Internal and Part II - External along with other Addendum/ Corrigendum/ Revisions issued/effected up to the last date of receipt of bid.

For Road Works: "SPECIFICATIONS FOR ROAD AND BRIDGE WORKS (FIFTH REVISION)" along with other Addendum/ Corrigendum issued, issued by the Ministry of Road Transport and Highways, Government of India and published by the Indian Road

Congress (IRC), with a cross reference to relevant Bureau of Indian Standards (BIS) for materials or aspects not covered by the IRC shall be used.

B. Part -2: Particular/ Supplementary Technical Specifications: The Supplementary

Technical Specifications shall comprise various Amendments/ Modification/ Additions for specifications referred to in Part 1 above and additional specifications for particular items of work not already covered in Part 1.

If a particular clause or a part thereof under Part 1 above., is amended/ modified/ substituted/ added upon, and incorporated under Part 2, referred to above, the Amendment Modification/ Substitution/ Addition to the relevant Clause or part of the Clause shall prevail.

When an amended/ modified/ substituted/ added clause supersedes a Clause or part thereof in the said Specifications, then any reference to the Clause shall be deemed to refer to the amended/ modified/ substituted/ added Clause or part thereof.

Insofar as amended/ modified/ substituted/ added Clause may come in conflict or be inconsistent with any of the provisions of the said Specifications under reference, the amended/modified/ substituted/ added Clause shall always prevail.

The Additional Specifications shall comprise specifications for particular item of works not already covered in Part I and in case of conflict shall prevail over general and particular I supplementary specifications.

For items of work in buildings and structure not covered by the specification, relevant items from Tamil Nadu Building Practice, National Building Code as amended from time to time shall apply.

In the absence of any definite provision on any particular issue in the Specifications, the work shall be carried out in accordance with Special Specifications to be prepared by Contractor and approved by Engineer-in-Charge. Such Special Specification shall be based on technical literature comprising national (IRC and IS) and international specifications and good Engineering practice. In case of any dispute, the decision of the Engineer-in-Charge shall be final and binding on the Contractor.

2.2 Additional Technical Specifications Schedule-A: Civil I Structural Work

2.2.1 Benchmarks and Setting out of Works

a. The Standard Benchmark and its Reduced Level with reference to which the Work shall be carried out is the GTS Benchmark available nearest to the Site. The Employer does not take the responsibility about the Correctness of the Levels indicated in the Drawings. The Contractor has to establish at least fifteen Benchmarks in the Site of Works with Reduced Levels clearly marked on them.

The Contractor shall be solely responsible for the accuracy of the Benchmark Levels and for maintaining the same throughout the Contract Period.

b. The Works shall be set out in accordance with the Drawings approved by the Employer.

c. The Contractor shall be responsible for the True and Proper Setting out of the Works and for the Correctness of the Positions, Levels, Dimensions and Alignments of all Parts of the Works and for the Provision of all Necessary Instruments, Appliances and Labours in connection therewith. The Contractor shall give at least 48 hours notice to the Employer of his intention to set out or give Levels.

d. If at any time during the Progress of the Work, any Error appears or arises in the Positions, Levels, Dimensions and Alignments of any part of the Work, the Contractor shall at his own expenses and risk, rectify such Errors to the satisfaction of the Employer.

e. The Checking of any setting out of any line or level by the Employer or his approved Representative shall not relieve in any way the Contractor of his responsibility for the Correctness thereof and he shall carefully protect and preserve all the Benchmarks, Site Rails, Pegs and other Things used in the setting out of Works.

f. All Duties concerning Establishment of a Set of Benchmarks, Permanent Stations, Centre Line Pillars, etc. for performing all the Functions necessary at the Commencement and during the Progress of Work till the Physical Completion of all the Items of the Work in question, shall be carried out by the Contractor at his own risk and cost.

g. The Centre Line of the Foundations shall be established by Total Station Equipment and the Centre Line Marks shall be engraved on smoothly finished masonry or concrete pillars of such dimensions and constructed at such places as directed by the Employer or his approved Representative and shall be maintained in proper manner throughout the Period of Construction.

h. He shall also keep proper Record of such Permanent Benchmarks established denoting therein their Correct Levels.

i. The Work of Establishment of all such Benchmarks shall be carried out by only experienced and skilled staff of the Contractor with the help of precise instruments suitable for this type of Work. The instruments used shall be checked for their accuracy and for permanent adjustments before the commencement of the Work and also at frequent intervals during the progress of the Work.

j. All such Benchmarks established by the Contractor shall be subject to check and approval of the Employer or his approved Representatives. If any Variations noticed in the Work as result of improper establishment or maintenance of such Benchmarks, it shall be rectified at the Contractor's own Risk and Expense.

k. Utilities:

i) Relocation of various utility Services and Tree Transplantation Works shall be the responsibility of the Contractor. Further, all the Utility and Service Lines such as Water Supply, Underground Drainage, Electrical, Telephone, Optical Fibre Cables, etc. those are incidental and obstructing, are to be permanently diverted in an acceptable manner to the Concerned Service Departments satisfactorily so that not to hinder the Services of the Lines. For shifting of various utilities, payments will be made as per rates of concerned departments as stated in schedule-B and as per utility department requirement and as per actuals, subject to producing documentary evidence of work completion from the concerned utility department. The proposal for shifting he chartered and unchartered utilities shall be submitted by the contractor to the concerned department and get the approval of Competent Authority of concerned department. CMRL will facilitate if required. The Time Schedule of 08 (Eight) Months is inclusive of the Period of Utility Shifting also and no Extension of Time would be granted due to Delay in this Work. No Monetary Claim in whatsoever manner shall be entertained separately. After the successful completion of relocation of above mentioned utilities, 80% amount of utility shifting cost shall be paid and remaining 20% shall be paid after getting Completion Certificate from the Concerned Department. (***Refer price schedule-B and bidders are NOT to quote in Schedule-B)*.** **The utility drawing (tentative) is enclosed as *Utility Plan at Alandur Metro Station vide drawing No. IS-1423-HIG-UTY-001-Revision-R7.***

ii) Utility identification at foundation locations will be done by the contractor and in case utility(s) is encountered or obligatory requirement is to be met out, the contractor shall inform Engineer for change in configuration at such location out of the standard spans configuration provided in the tender drawing to save the utility(ies) or to meet obligatory requirements within the accepted price. Shifting of utility(ies) would be done only in exceptional cases where in the opinion of the Engineer no other option is available. Contractor shall be paid for diverting the utilities as per rates of CMWSSB, BSNL, TNEB, and other departments and as per actuals, subject to producing documentary evidence of work completion.. No payment shall however be made for supporting the utilities during course of work.

iii) The utilities are to be diverted with proper liaison and approval of the utility owning agencies. The utilities which are not to be diverted but require supporting, proper supporting be done so that they are not damaged along their branches. Precautions to be taken while handling the utilities are mentioned as under;

a. Utilities must not be damaged at any cost. If due to some or the other reason, mishap occurs, it should be rectified immediately by the Contractor at his own cost under intimation of CMRL .

b. Till rectification of the damaged trunk sewers, the Contractor shall arrange substitute arrangement for sewer pumping and its disposal as per directions of Chennai Metro Water Supply and Sewage Board (C M W SSB).The similar arrangement to be done for other utility.

c. The manholes of Trunk(T)/Sewers should not be covered under the extended portion beyond the structure (crushing barrier),etc.as these may create hindrances to the annual d e-silting/cleaning of sewer lines.

d. Sufficient distance of foundation from outer edge of T/Sewers be kept in view of further maintenance/Safety of T/Sewers.

e. The covers of manholes are saved from heavy machinery movement to avoid any accident/Slippage of debris in manholes etc. into the T/Sewers which may cause blockage of lines. In case of damage of manhole cover& frame the same shall be replaced immediately by the Contractor at his own cost.

f. Manholes of the trunk sewer should be kept freely accessible for cleaning and removal of blockages and debris should not be dumped over these man holes.

g. Branch sewer connections which are connected with the T sewers should also be taken care of. If the same are damaged, the same should be restored immediately on priority.

iv) The construction of structures will have to be planned in such a manner that they do Not obstruct or interfere with the existing road s/railways and other utilities. Where work is required to be carried out at locations adjacent to such road s/railways, utilities, structures, monuments etc. suitable safety and protection arrangements will have to be ensured for which nothing extra will be payable. It should be ensured that no damage is caused to any such element and Engineer/Employer shall be indemnified against such damage at no extra cost.

v) Construction/strengthening/maintenance of road/footpath to facilitate flow of traffic/pedestrian during the currency of tender shown in indicative traffic diversion plan and restoration of road/foot path ready for handing over to the owning agency

l. Removal and Relocation of Existing Bus Shelters within the Battery Limit, if any, to the Location within or beyond the Battery Limit as approved by the Employer.

m. Removal and Relocation of Existing Traffic Signages and Signals within the Battery Limit, if any, to the Location within or beyond the Battery Limit as approved by the Employer.

n. Removal and Relocation of Existing Hoardings, Advertisement Boards and Appurtenant Structures within the Battery Limit, if any, to the Location within or beyond the Battery Limit as approved by the Employer.

o. Dismantling and Disposal of Earth / Debris of existing RCC and Masonry Structures, PCC, existing Road Pavements, RCC / SSM Drainage Structures, Tree Roots, Culverts, Medians, Kerbs, Traffic Islands, Earth Retaining Structures, Ducts, Hoarding and Advertisement Boards and Appurtenant Structures, etc. required for the Execution of the Work.

p. Making good the Road Surface as per IRC Standards, which are damaged / worn out during Construction of the Work and restoring the same to the Original Status.

q. Providing and fixing of Interlocking Block Kerb of Approved Design and pattern of strength 20 N/Sqm. with 12mm metal and minimum cement content as applicable to M20 grade concrete as per IS - 456-2000, manufactured by mechanical or hydraulic machine using VIBRO - COMPACTION process and laid over lean cement concrete 1:5:10, including pointing and inserting the joints with CM 1:3 and fixing in position to proper level and alignment including necessary earthwork excavation, and the rate includes 50 mm. thick sand filling, 50 mm. thick Lean cement concrete 1:5:10, all labour charges, machinery charges, edge cutting, transportation charges to site etc., complete for Kerbs. 400 mm x 150 mm thick (Bus Route Roads) as per the Instructions of the Employer / his Representatives.

2.2.2 Specifications of Thermo-Mechanically Treated Bars (TMT Bars)

Thermo - Mechanically Treated Bars (TMT Bars) shall be used in all RCC works. TMT Bars of Fe 500 grade conforming to IS - 1786 Specifications shall be procured from Main producers as approved by Min. of Steel.

Bars are currently produced in various grades by M/s. Steel Authority of India Limited (SAIL), M/s Tata Steel and M/s Rashtriya Ispat Nigam Ltd. With trade names of SAIL (TMT), TISCON - TMT and REBARS respectively.

Every care should be taken to avoid mixing different types of grades of bars in the same structural members as main reinforcement to satisfy clause 25.1 of IS: 456.

The point of change over shall be planned at any one particular level and shall be done through columns only. At the point of change over, it shall be necessary to increase the area of main steel in columns by 10% and the length of lap of bars by 50%.

The grades, chemical and mechanical properties of different varieties are as per Table I, II & III.

TABLE -I

Sl. No	M/s SAIL	M/s Tata Steel	M/s Rashtriya Ispat Nigam Ltd	Yield Stress (0.2% proof Stress) considering equivalent as per IS: 1786
1	SAIL TMT 415	TISCON TMT 42	REBARS 415	415 N/mm^2
2	SAIL TMT 500	TISCON TMT 50	REBARS 500	500 N/mm^2
3	SAIL TMT 530	----------	----------	530 N/mm^2

TABLE -II

CHEMICAL COMPOSITION IN %age

	IS: 1786 Fe 415	SAIL TMT ALLGRADES	TISCON		VIZAG STEEL (RINL) REBARS ALL GRADES
			TMT -42	TMT- 50	
CARBON	0.300	0.250	0.170	0.190	0.200
SULPHUR	0.060	0.050	0.045	0.0450	0.040
PHOSPHOROUS	0.060	0.050	0.045	0.0450	0.050
SULPHUR+ PHOSPHOROUS	0.110	0.100	0.090	0.090	0.090

TABLE -III

MECHANICAL PROPERTIES

	IS: 1786	SAIL-TMT			TISCON		VIZAG STEEL (RINL) REBARS	
GRADE	Fe 415	415	500	550	TMT-42	TMT- 50	Fe 415	Fe 500
YIELD STRENGTH	415	415	500	550	450	530	460	540
TENSILE STRENGTH	485	500	580	630	510	580	520	585
ELONGATION IN%	14.5	22	20	18	20	18	20	16

2.2.3 Ready Mixed Concrete.

Contractor will have to procure ready -mixed- concrete only from RMC plants approved by Engineer-in-Charge. He shall, within 15 days of award of the work, submit a list of at least three R.M.C. plant companies of repute along with the details of such plants indicating name of owner/ company, its location, capacity, technical establishment, past experience and text of Memorandum of Understanding (MOU) proposed to be entered between purchaser and supplier to the satisfaction of Engineer-in-Charge, who, after satisfying itself

about quality/ capability of the company, shall give approval in writing (subject to drawl of MOU). The MOU shall be drawn with RMC plant owner/ company and submitted to Engineer-in-Charge within a week of such approval. The contractor will not be allowed to purchase ready-mixed-concrete without completion of above stated formalities for use in this project.

Notwithstanding the approval granted by Engineer-in-Charge in aforesaid manner, the contractor shall be fully responsible for quality of concrete including input control, production control, transportation and placement etc.

The Engineer-in-Charge will reserve right to deploy its representative to inspect plant site at any stage and reject the material / concrete if he is not satisfied about quality of material / product. The contractor should, therefore, draw MOU agreement with RMC owner / company very carefully keeping all terms and conditions/ specifications forming a part of this bid document.

2.2.4 R.C.C. Work

2.2.4.1 Centering and Shuttering

(i) The contractor shall use steel centering and shuttering of best quality so as to ensure that no rendering or smooth finishing is required to be done to concrete surface in any - location. Wherever joint marks are observed in concrete surface, they shall be rubbed / ground smooth. In case, concrete surface is found to be not up to mark, contractor would be asked to render the same smooth or otherwise dismantle the same and re-do. No payment shall be made for such smooth finishing / rectification /re-doing.

The form work shall include all temporary or permanent form required for forming the concrete of the shape, dimensions and surface finish as shown in the drawings or as directed by the Engineer-in-Charge together with the all proper staging, centering, scaffolding and temporary construction required for their support. The cost of form work is considered to be included in the relevant item of PCC/ RCC unless otherwise specified.

(ii) The centering & shuttering for RCC work shall be with M.S. pipes and trusses & plates, such as Acrow or equivalent. No Timber centering material shall be permitted for the work. The shuttering plates for raft, RCC wall, slabs etc. shall be made with M.S. plates only. No timber & plywood shuttering is to be used for work. Shuttering shall be so good that no rendering of plastered surface will be permitted. In exceptional cases, if permitted, nothing extra shall be payable and the decision of the Engineer-in-Charge shall be final & binding in this regard.

(iii) The concrete surface shall be free from honey combing, offsets, superfluous mortar, cement slurry and foreign matter. The form work shall be assembled in such a way as to facilitate removal of their parts in proper sequence without any damage to the exposed cement concrete surfaces and corners etc. Such surfaces shall not be rendered or plastered or painted with cement or otherwise. The contractor shall keep skilled staff for special care and supervision to check the form work and concreting so that every member is made true to its size, shape, level and alignment so that it does not result in any deformation, snug, bulges etc. The contractor shall also take suitable precautionary measures to prevent breaking and chipping of corners and edges of completed work until the structure is handed over.

2.2.4.2 R.C.C. Work (Design Mix Concrete)

(i) The R.C.C. work shall be done with Design Mix Concrete or Ready Mixed Concrete from reputed and approved suppliers like ACC, Birla, Unitech or equivalent brand with approval of Engineer/Employer. In the nomenclature of items wherever letter 'M' has been indicated, the same shall imply for the Design Mix Concrete. The Design Mix Concrete will be designated based on the principles given in IS: 456, 10262 & SP 23. The contractor shall design mixes for each class of concrete such that the concrete ingredients and proportions will result in concrete mix meeting specified requirements. In case of use of admixture and or white cement, the mix shall be designed with these ingredients as well. The specification mentioned herein below shall be followed for Design Mix Concrete.

(ii) INGREDIENTS: -

Coarse Aggregate: - As per CPWD specifications.

Fine Aggregate: - As per CPWD specifications.

Water:- It shall conform to requirements laid down in IS: 456- 2000 and CPWD specifications.

Water used for mixing, and curing shall be clean and free from injurious amounts of oils. acids, alkalis, salts, sugar, organic materials or other substances that may be deleterious to concrete or steel.

Potable water is generally considered satisfactory for mixing concrete. As a guide the following concentrations represent the maximum permissible values:

a) To neutralize 100 ml sample of water, using phenolphthalein as an indicator, it should not require more than 5 ml of 0.02 normal NaOH. The details of test

are given in 8.1 of IS 3025 (Part 22).

b) To neutralize 100 ml sample of water, using mixed indicator, it should not require more than 2 ml of 0.02 normal H_2SO_4. The details of test shall be as given in 8 of IS 3025 (Part 23).

c) Permissible limits for solids shall be as liven in Table 1

In case of doubt regarding development of strength. the suitability of water for making concrete shall be ascertained by the compressive strength and initial setting time tests specified in following paragraphs.

Table 1. Permissible Limit for Solids

Sl No		Tests as per	Permissible Limit, Max
1	Organic	IS 3025 (Part 18)	200 mg/l
2	Inorganic	IS 3025 (Part 18)	3000 mg/l
3	Sulphates (as SO_4)	IS 3025 (Part 24)	400 mg/l
4	Chlorides (as Cl)	IS 3025 (Part 32)	2000 mg/l for concrete not containing embedded steel and 500 mg/l for reinforced concrete work
5	Suspended matter	IS 3025 (Part 17)	2000 mg/l

The sample of water taken for testing, shall represent the water proposed to be used for concreting, due account being paid to seasonal variation. The sample shall not receive any treatment before testing other than that envisaged in the regular supply of water proposed for using concrete. The sample shall be stored in a clean container previously rinsed out with similar water.

Average 28 days compressive strength of at least three 150mm concrete cubes prepared with water proposed to be used shall not be less than 90 percent of the average of strength of three similar concrete cubes prepared with distilled water, The cubes shall be prepared cured and tested in accordance with the requirements of IS 516.

The initial setting time of test block made with the appropriate cement and the water proposed to be used shall not be less than 30 min and shall not differ by±30min from the initial setting time of control test block prepared with the same cement and distilled water.

The test blocks shall be prepared and tested in accordance with the requirements of IS 4031 (Part 5).

The pH value of water shall be not less than 6.

Sea Water

Mixing or curing of concrete with sea water is not recommended because of presence of harmful salts in sea water. Under unavoidable circumstances sea water may be used for mixing or curing in plain concrete with no embedded steel after having given due consideration to possible disadvantages and precaution including use of appropriate cement system.

Water found satisfactory for mixing is also suitable for curing concrete. However, water used for curing should not produce any objectionable stain or unsightly deposit on the concrete surface. The presence of tannic add or iron compounds is objectionable.

Cement: - Cement arranged by the contractor will be OPC (Ordinary Portland Cement) of grade 43 (conforming to IS: 8112) or Grade 53. Cement of grade lower than that used for mix design shall not be allowed to be used in the work.

Admixtures: - Wherever required, admixtures of approved quality shall only be mixed with concrete as specified. The admixtures shall conform to IS: 9103. The chloride content in the admixture shall satisfy the requirement of BS: 5075. The total amount of chlorides in the admixture mixed concrete shall also satisfy the requirements of IS: 456.

The contractor shall not be paid anything extra for admixtures required for achieving desired workability without any change in specified water cement ratio for RCC/ CC work.

(iii) Grade of Concrete:- The characteristic compressive strength of various grades of concrete shall be given as below :

Sl. No	Grade Designation	Compressive Strength on 15 cm cubes min. at 7 days. (N/mm^2)	Specified characteristic compressive strength at 28 days (N/mm^2)	Minimum cement content (Kg. per cubic metre)	Maximum water cement ratio
(i)	M25	As per Design	25	320	0.45

(iv) The mix will be designed for minimum slump of 40 mm.

(v) In the designation of concrete mix letter 'M' refers to the mix and the number to the specified characteristic compressive strength of 15 cm. cube at 28 days expressed in N/mm^2.

(vi) The mix shall be got designed from any of the following institutes/ organizations:

(a) I.I.T., Madras.

(b) Any repute engineering college as approved by Engineer-in-Charge

(c) Any Lab of repute as approved by Engineer-in-Charge

The various ingredients for mix design/ laboratory tests shall be sent to the lab/test houses through the Engineer-in-Charge immediately after award of work and the samples of such aggregates sent shall be preserved at site. The admixture if used by contractor shall be at his own cost without any extra payment.

(vii) The contractor shall submit the mix design report from any of above approved laboratories for approval of CMRL within 30 days from the date of issue of letter of acceptance of the bid. In case of white Portland cement and the likely use of admixtures in concrete with ordinary Portland/white Portland cement, the contractor shall design and test the concrete mix by using trial mixes with white cement and/ or admixtures also, for which nothing extra shall be payable.

2.2.4.3 Batching Mixing, Transportation, Placing & Compaction

The concrete shall be sourced from ready mixed concrete plants conforming to IS: 4925. It shall have the facilities of presetting the quantity to be weighed with automatic cut-off when the same is achieved. Concrete will be transported by transit mixers / concrete pumps so as to avoid segregation and concreting at places may have to be resorted to by concrete pump for which nothing extra shall be paid. Placing of concrete with tower crane and bucket shall be permitted as per the requirement. Accuracy of measurement shall be as specified in IS: 456.

All other operations in concreting work like Mixing, Slump, Laying/ placing of concrete, compaction, curing etc. not mentioned in this particular specification for Design Mix of Concrete shall be as per IS: 456 - 2000 and Special Conditions forming part of this bid document.

2.2.4.4 Curing

Curing and protection shall start immediately after the compaction of the concrete to protect it from

10. Premature drying out, particularly by solar radiation and wind;
11. leaching out by rain and flowing water;
12. high internal thermal gradient;

13. vibration and impact which may disrupt the concrete and interfere with its bond to the reinforcement

14. After the concrete has begun to harden i.e. 1 to 2 hr. after laying curing shall be started.

15. All concrete, unless approved otherwise by the Engineer-in-Charge, shall be cured by use of continuous sprays or ponded water or continuously saturated coverings of sacking, canvas, or other absorbent material for the period of complete hydration with a minimum of 7 days. The quality of curing water shall be the same as that used for mixing.

16. Where a curing membrane is approved to be used by the Engineer-in-Charge, the same shall of a non-wax base and shall not impair the concrete finish in any manner. The curing compound to be used shall be approved by the Engineer-in-Charge before use and shall be applied with spraying equipment capable of a smooth, even textured coat.

17. When concrete is used as sub-grade for flooring, the flooring may be commenced before the curing period of sub-grade is over, but curing of sub-grade shall be continued along with the top layer of flooring for a minimum period of 7 days.

Curing may also be done by covering the surface with an impermeable material such as polyethylene, which shall be well sealed and fastened.

2.2.4.5 Work Strength Test

(i) TEST SPECIMEN

Work strength test shall be conducted in accordance with IS: 516 on random sampling. Each test shall be conducted on six specimens, three of which shall be tested at 7 days and remaining three at 28 days. Additional samples shall be prepared as per direction of Engineer - in - Charge for testing samples cured by accelerated method as described in IS: 9103.

(ii) TEST RESULTS OF SAMPLE

The test results of the sample shall be the average of the strength of three specimens. The individual variation shall not be more than ±15 percent of the average. If more, the test results of the sample are invalid. The tests shall be done at the reputed laboratories as approved by Engineer-in-Charge.

2.2.4.6 Standard of Acceptance

Standard of acceptance shall be as specified in clause 16 of IS: 456 - 2000.

(i) In order to keep the floor finish as per architectural drawings and to provide required thickness of the flooring as per specifications, the level of top surface of RCC shall be accordingly adjusted at the time of its centering, shuttering and casting for which nothing extra shall be paid to the Contractor.

(ii) Measurement: -As per CPWD specifications.

(iii) Tolerances: - As per CPWD specifications.

(iv) Rate: - The rate includes the cost of materials and labour involved in all the operations described above except for the reinforcement which will be paid separately.

(v) In case of rejection of concrete on account of unacceptable compressive strength, the work for which samples have failed shall be redone by the contractor at his cost. However, the CMRL may order for additional tests (like cutting cores, ultrasonic pulse velocity test, load test on structure on part of structure, etc.) to be carried out at the cost of contractor to ascertain if the portion of structure wherein concrete represented by the sample has been used, can be retained on the basis of results of individual or combination of these tests. The Contractor shall take remedial measures necessary to retain the structure as approved by the CMRL without any extra cost. However, for payment, the basis of rate payable to contractor shall be governed by the 28 days cube test results and reduced rates shall be regulated accordingly.

2.2.4.7 Frequency of Sampling:

The minimum frequency of sampling of concrete of each grade shall be in accordance with the following:

Quantity of Concrete in the Work, Cubic metre per day	Number of Samples
1 – 5	1
6 – 15	2

16 – 30	3
31 – 50	4
51 & above	4 plus one additional sample for each additional 50 cubic metre or part thereof

Note: At least one sample shall be taken from each shift.

2.2.5 Reinforcement

This work shall consist of furnishing and placing Thermo-Mechanically Treated Bars of the shape and dimensions required as per drawings and conforming to technical specifications and as per nomenclature of the item.

(i) Cover Block

The contractor shall provide approved type of support for maintaining the bars in position and ensuring required spacing and correct cover of concrete to the reinforcement as called for in the drawings. Spacer blocks of required shape and size, MS chairs and spacer bars shall be used in order to ensure accurate positioning of reinforcement.

Pre cast concrete Cover blocks must be used in casting of RCC member. The grade of concrete cover block should be same as that of grade of RCC member. The thickness of cover should be according to type of structural member and as per IS 456.

2.2.6 Scaffolding

Formwork / Shuttering for walls and slabs shall be suitably designed and the same should be got approved in advance from Engineer-in-Charge.

2.2.7 Backfilling for foundations

Back filling around completed foundations, structures, trenches and in plinth shall be done to the lines and levels shown on the drawings including any trimming of the surfaces, as may be necessary. This shall be done with selected and approved earth from excavation or otherwise with materials as directed by the Engineer in Charge. Where sufficient suitable material is not available from the excavation, the Engineer-in-Charge may direct to import suitable earth from other sources. The filling shall be done in layers of thickness not exceeding 15 cm with watering, rolling and ramming by manual methods/ mechanical compactors to grade and level as shown on drawings to obtain 90% laboratory maximum

dry density. The Contractor shall not commence filling in and around any work until it has been permitted by the Engineer in Charge.

2.2.8 Brick Work

The brick work shall be carried out with good quality well burnt F.P.S. bricks of specified class designation. The rate shall also include for leaving chases/notches for dowels/ cramps for all kind of cladding to come over brick work. The rates for half brick work/brick work in foundation and plinth shall be valid for all depths.

Brick shall generally conform to specifications for brick class as per CPWD specifications. Both the faces to wall of thickness greater than 23 cms, shall be kept in the proper plane of wall. Half brick thickness or less shall be measured separately and paid in sq. meters. Half brick thickness shall be taken as 115mm. Brick wall beyond half bricks thickness shall be measured in multiple of half brick (i.e. 115mm) which shall be deemed to be inclusive of mortar joints. When a fraction of half brick occurs due to architectural reasons or otherwise as per requirements, the same shall be measured as half brick work provided such fraction exceeds 2 cms. Fraction up to 2 cms thickness shall be made up in mortar and paid for as per specified thickness under brick work.

2.2.9 Plastering of wall or concrete structure

Surfaces to be plastered must be clean and free from dust, loose material, oil, grease, mortar droppings, sticking of foreign matter, traces of algae, etc. It is very important to ensure that there should not be any chance of the plaster getting debonded due to presence of materials harmful for bonding. Raking out of joints is expected to be carried out along with masonry but it should be hacked thoroughly so as to receive good key. Walls should be sufficiently damp prior to plastering. Water from plastering mortar must not be absorbed by masonry under any condition Plastering shall be started from the top and worked down towards the floor. All putlog holes shall be properly filled in advance of the plastering as the scaffolding is being taken down. To ensure even thickness and a true surface, plaster about 15 × 15 cm shall be first applied, horizontally and vertically, at not more than 2 metres intervals over the entire surface to serve as gauges. The surfaces of these gauged areas shall be truly in the plane of the finished plaster surface. The mortar shall then be

laid on the wall, between the gauges with trowel. The mortar shall be applied in a uniform surface slightly more than the specified thickness. This shall be brought to a true surface, by working a wooden straight edge reaching across the gauges, with small upward and

sideways movements at a time. Finally, the surface shall be finished off true with trowel or wooden float according as a smooth or a sandy granular texture is required. Excessive troweling or over working the float shall be avoided.

When suspending work at the end of the day, the plaster shall be left, cut clean to line both horizontally and vertically. When recommencing the plastering, the edge of the old work shall be scrapped cleaned and wetted with cement slurry before plaster is applied to the adjacent areas, to enable the two to properly join together. Plastering work shall be closed at the end of the day on the body of wall and not nearer than 15 cm to any corners or arises. It shall not be closed on the body of the features such as plasters, bands and cornices, nor at the corners of arises. Horizontal joints in plaster work shall not also occur on parapet tops and copings as these invariably lead to leakages. The plastering and finishing shall be completed within half an hour of adding water to the dry mortar. No portion of the surface shall be left out initially to be patched up later on. The plastering and finishing shall be completed within half an hour of adding water to the dry mortar.

2.2.10 Trail Flooring Tiles for Visually Impaired Persons

- Trail flooring Tiles shall be of Endura make or equivalent.
- They shall provide "linear" and "button" surface indication and colour as per approved standards confirming to RNIB and DETR.
- They shall be fully vitrified unglazed porcelain with carborendum finish and water absorption of less than 0.5%.
- Colour of the tile shall be solid and constant through the thickness of the tile.
- The tile shall be fixed as per manufacturer's recommendation.

2.2.11 The tactile flooring

The tactile flooring provision should be made in accordance with the IRC-103: 2012.

Every change in level on the footpath (steps, kerbs or road-works) should be made clearly visible through the use of bright contrasting colours and tactile pavers for persons with low vision and vision impairment. Warning blocks should be placed 300 mm at the beginning and end of the ramps, stairs and entrance to any door.

These tiles should have a colour (preferably canary yellow), which contrasts with the surrounding surface. Tactile paving must, however, be maintained to ensure that the profile does not erode away. Uniform risers of 150 mm and tread of 300 mm shall be adopted for

the stairs. Stair edges should have bright contrasting colors. Maximum height of a flight between landings shall be 1200 mm. Landing should be 1200 mm deep, clear of any door swing. The steps should have an unobstructed width of at least 1200 mm. Top and bottom landings with a strip of tactile warning blocks is to be provided to give advanced tactile warning of a change in level. The first and last steps should provide a permanent visual contrast with the rest of the steps.

2.2.12 Stainless Steel Works

2.2.12.1 All works shall confirm to relevant Indian Standards in the absence of equivalent Indian Standard following codes shall be followed:

ENV 1993-1-1 Design of steel structures: General rules and rules for buildings

ENV 1993-1-2 Design of steel structures: Structural fire design

ENV 1993-1-3 Design of steel structures: Cold – formed thin gauge members and sheeting

ENV 1993-1-4 Design of steel structures: Stainless steels

ENV 1993-1-5 Design of steel structures: Plated structural elements

EN 1993-1-1 Design of steel structures: General Rules and Rules for buildings

EN 1993-1-2 Design of steel structures: Structural fire design

EN 1993-1-3 Design of steel structures: Cold – formed thin gauge members and sheeting

EN 1993-1-4 Design of steel structures: Stainless steels

EN 1993-1-5 Design of steel structures: Plated structural elements

EN 1993-1-8 Design of steel structures: Design of Joints

EN 1993-1-9 Design of steel structures: Fatigue strength of steel structures

EN 1993-1-10. Design of steel structures: Selection of materials for fracture toughness and through thickness properties

2.2.12.2 Material grades

The material shall be authentic stainless steel of the grade 1.4301 (widely known as 304) it shall contain 17-18% chromium and 8-11% nickel.

	Grade	Product Form[1]	Max thickness (mm)	Minimum 0.2 % proof strength[2] (N/mm^2)	Ultimate tensile strength (N/mm^2)	Elongation after fracture (%)
Basic		c	6	230	540-750	453
Chromium -	1.4301	H	12	210	520-720	453
Nickel		**p**	75	210	520-720	45

	Grade	Product Form[1]	Max thickness (mm)	Minimum 0.2 % proof strength[2] (N/mm^2)	Ultimate tensile strength (N/mm^2)	Elongation after fracture (%)
Authentic		c	6	220	520-670	45
Steels	1.4301	**H**	12	200	520-670	4
		p	75	200	500-650	45

Notes:

(1) C= cold rolled strip, H=hot rolled strip, P=hot rolled plate

(2) Transverse properties

(3) For stretcher leveled minimum values is 5 % lower

Chemical Composition

	Grade	Content of alloying element (maximum or range permitted) weight%				
		c	Cr	Ni	Mo	Others
Austenitic steels	1.4301	0.07	17.0-19.5	8.0-10.5		
	1.4307	0.03	17.5-19.5	8.0-10.0		
	1.4401	0.07	16.5-18.5	10.0-13.0	2.0-2.5	
	1.4404	0.03	16.5-18.5	10.0-13.0	2.0-2.5	
	1.4541	0.08	17.0-19.0	9.0-12.0	-	Ti:5xC-0.7(1l
	1.4571	0.08	16.5-18.5	10.5-13.5	2.0-2.5	Ti:15xC-0.7(1)

2.2.12.3 Welded connections

Weld connection shall be made using correct procedures, including compatible consumables, with suitably qualified welders.

The contractor shall ensure the strength of the weld and to achieve a defined weld profile and shall also maintain corrosion resistance of the weld and surrounding material.

The following recommendations apply to full and partial penetration but welds and to fillet welds made by an arc welding process such as:

Process Number	Process Names
111	Metal – arc welding with covered electrode (manual metal are welding)
121	Submerged are welding with wire electrode
122	Submerged are welding with strip electrode
131	Metal-arc inert gas welding (MIG welding)
135	Metal-arc active welding (MAG welding)
137	Flux-cored wire metal-arc welding with inert gas shield
141	Tungsten inert gas welding (TIG welding)
15	Plasma arc welding

(Process numbers are as defined in EN ISO 4063.)

Compatible consumables should be used, such that the weld yield strength and Ultimate strengths exceed those of the parent material. Note that special consideration should be given to the case when a test value of the 0.2% proof stress is used as a basis of design. The weld should be free from zinc, including that arising from galvanized products, and from copper and its alloys. Welding deficiencies such as undercut, lack of penetration, weld spatter, slag and stray are strikes are all potential sites and should thus be minimized.

Heat input and interpass temperatures need to be controlled to minimize distortion and to avoid potential metallurgical problems. Welding should be carried out to an approved welding procedure for metallic materials, Part 2: Welding procedure specification for arc welding.

2.2.12.4 Consumables

All welding consumables should conform to the requirements specified in ENV 1090-6. It is important that consumables are kept free from contaminants and stored according to the manufacturer's instructions.

2.2.12.5 Fabrication Aspects

The Precautions shall be taken at all stages of storing, handling and forming to minimize influences that jeopardize the formation of the self-repairing passive layer. Special care shall be taken to restore the full corrosion resistance of the welded zone.

The European Standard specification covering fabrication and erection of stainless steel structures is ENV 1090 Execution of steel, Part 6 Supplementary rules for stainless steels shall be followed.

2.2.13 Reflective Laminated Glass Work

Laminated glass of a strong, PVB interlayer bonded between two glass plies using heat and pressure shall be used in the work. The glass plies shall be of equal thickness. Laminated glass shall be a durable, high-performance glazing product, designed to remain integral in the opening should glass damage occur.

a. All glass and glazing materials shall be verified and co- ordinated with the - applicable performance requirements.
b. The Contractor shall furnish and install glass and glazing work as indicated on the drawings and as specified herein. All glass shall be cut

to required sizes and ready for glazing. Any glass pane, which does not fit any section of the glazing will be rejected and a replacement made at the contractor's expense. All glass shall be of accurate sizes with clear undamaged edges and surfaces, which are not disfigured.

c. Glass shall conform to the quality; thickness and dimensional requirements specified in US federal specifications DD-G0451C, AS-1288 and equivalent Indian standard.
d. All units shall be of reflective laminated glass as shown on drawings. These units shall be factory assembled and hermetically sealed forming airtight dehydrated units as per ASTM E 774 CLASS -1.
e. All units shall be heat strengthened as per ASTM C 1048. These panes shall be edge polished to ensure that there are no sharp edges. The finish of the edge polish should be matt finished to avoid internal reflection of light around the edges.
f. Permanent identification marking on glass shall be accomplished by a technique selected by the manufacturer. The location of the marking shall be proposed by the Manufacturer and approved by CMRL. All glass shall be delivered to site with the Manufacturer's label of identification attached.
g. Factory glaze all glass that is indicated to be adhered to aluminum frame with sealants. Sealants shall be fully cured prior to shipment to project site and installation.
h. Glass breakage: All glass breakage caused by the Contractor or his sub-contractor because of negligence or caused by the installation of faulty work by him shall be replaced by the contractor at his own expense without any delays to the project completion schedule.
i. The contractor shall be responsible to deliver to CMRL without charge replacement for any unit of glass and glazing that fails within the **defects liability period of two years** from date of completion of main contract.
j. Glass shall conform to the quality, thickness and dimensional requirements specified in Indian specifications.
k. The glass shall withstand lateral imposed load and comply with requirements of local building codes.
l. Glass shall be free from defects or impurities detrimental to its

performance. Defects which are not detrimental to the performance such as bubbles, waves, spots, scratches, pin holes, discoloration, chipping or impurities shall only be acceptable if not visible from a distance of 3m or more, or in accordance with the Manufacturer's guidelines. The glass is to be produced in such a way that the rollers will be parallel to what will be the horizontal position of the glass. Glass shall be consistent in colour.

m. Glass Specifications and Photometric properties.

i) Reflective Laminated glass of 6mm clear toughened glass +1.52 mm PVB + 6mm clear toughened glass with spider fittings.

ii) Spider fitting shall be of SS316 grade, Ozone make or equivalent. For use of any equivalent make, prior approval of CMRL is necessary.

The Glazing shall have following Photometric properties and characteristics:

Properties	
Visible light transmittance	85%
Solar Heat Gain Coefficient	0.64
Shading co-efficient	0.79
U-Value	0.98
UV Screening	>99

n. Preferred make and type of glass (not in any order of preference) is as listed under.

Glaverbel Glass - Sunergy.

Saint Gobain

o. Silicon Sealant -Dow Corning or Walker

2.2.14 List of Acceptable Makes for Civil/ Structural Works

1) Cement J.K/ Birla / Ultra Tech/ ACC/ Jaypee
2) White Cement J.K / Birla
3) TMT Steel Reinforcement bars TATA/ SAIL/ RINL
4) Water Proofing Compound CICO/ Tapecrete/ Impermo/ Pidilite
5) Water Proof Cement Paint Asian APEX/ Snowcem
6) Synthetic enamel paint / primers / Distempers (Superior Quality Paint) ICI/ Asian/ Berger/ Nerolac/ Dulux

7)	Hardener	Fosroc / Roffe
8)	Stainless Steel	Jindal Steel Arch. Or other any approved
9)	Trail Ceramic Tiles	Endura, Johnson, Somany
10)	Steel Sections	TATA Steel, SAIL, ESSAR, RINL
11)	Epoxy Paint	Asian, Nerolac, Dulux, Shalimar, Berger

Note: The materials as approved by the Engineer-in-Charge shall be used in the work.

2.2.15 Traffic Diversion:

The Contractor shall ensure that the Traffic Movement during the Construction of the Works is properly diverted, maintained and obstruction to the Traffic Movement is kept to the minimum. The Traffic Diversion with all Cost of Men and Material is to form part of the Contract. The Traffic Diversion shall include but not be limited to the following.

- Prepare Traffic Diversion Plan for different Phases of Construction and get approval from the concerned Police Department by the Contractor.
- All Necessary Arrangements required for Diversion of Traffic, Erection of Sign Boards, Cautionary Boards and Illumination, etc.
- Provide Road Markings, Drainage System, Footpath for the Diversion Roads.
- Provide Skilled Flagmen for Traffic Diversion as per the Requirement of Concerned Department.
- Provide Traffic Barricades with Blinkers, Reflective Tapes, Road Delineators, Traffic Cones, Portable Signages, Reflective Lights and other necessary Traffic Signage as required, as directed by the Concerned Authorities and as per the Specification. And after Completion of the work everything should be handed over to the Client Representative without any extra charge.
- Provide required Sub Grade and Surface Treatments for the Diversion Roads based on IRC Standards before Traffic Diversion and maintain for the Smooth Flow of Traffic throughout the Construction Period as directed by the Employer.
- After Completion of the Work, the Diversion Roads are to be rehabilitated as per IRC Standards and provided with 40mm

Bituminous Concrete irrespective of other Treatments provided earlier during Pre-Construction and Construction Period of the Work.

- It is the responsibility of the Contractor to work out the actual Traffic Diversion Schedule in concurrence with the Requirements of the Concerned Department and execute the same during different phases of Construction.
- Pedestrian Facilities shall be provided for Diverted Roads and the Plan for Pedestrian Facilities shall be got approved from the concerned Police Department by the Contractor.

2.2.16 Permission from Highway and Traffic Police Department

- The Contractor shall be completely responsible in applying and getting permissions from concerned Highway and Traffic Police departments before starting any site executions. Concerned authorities to be communicated through proper channels and get permission prior to mobilizing men Material and Equipment. It is responsibility of Contractor to make sure there is no delays in execution due to legal queries from any concerned authorities.

2.2.17 Barrication around the Construction Area

- The Contractor shall be required to keep the Site as Safe and Secure as possible at all times, including the Erection of Site Perimeter Hoarding, which shall also deter trespassers both adult and children alike, as per the Approval of the Employer.
- The Contractor shall provide a solid two-meter-high securely erected Barricade including Lights over Barricades at night around the perimeter of the Site as per the Approval of the Employer, with Agreed and Guarded Access and Egress Points for both personnel and vehicles.
- At each entrance to the Site, the Contractor shall erect a large Billboard warning all persons who enter the Site that they are required to wear the Appropriate Personal Protective Clothing and that no Unauthorized Access is allowed.

- Wherever the Barricade borders on Pedestrian Footpath, Lightings shall be provided to illuminate the Pedestrian Routes. The Positioning of the Barricade Line shall not reduce the Width of Pedestrian Footpath to less than 900mm.
- Site Perimeter Barricade shall be washed at least once a month and repainted at least annually.
- The Site Barricade shall need to be inspected on a regular basis in order to ensure that the Integrity of the Fencing is maintained at all times as far as practicable.
- After Completion of work Barricades and other traffic diversion boards shall be removed by the Contractor and it should be handed over to the Client without any charges.

Schedule – 'B' Electrical Work

Technical Specifications of Electrical Work

1.1 General:

The electrical installation work shall be carried out in accordance with Indian Standard Code of practice for Electrical wiring installation IS:732-1989 and IS:2274-1963. It shall also be in conformity with the current Indian Electricity rules and regulations and requirements of the local Electricity supply authority and fire insurance regulation. Electrical work in general shall be carried out as per following specifications.

Wherever these specifications calls for a higher standard of material and or workmanship than those required by any of the above - mentions regulations and specification then the specification here under shall take precedence over the said regulations and standards.

1.2 Scope of Work:

The scope of work shall cover the internal electrical works for proposed FOB at Alandur Metro Station, Chennai.

The scope of work covers complete electrical installation system including but not limited to:

- Supply, storage, installation, testing and commissioning of all equipment, components, accessories, labour, tools and tackles required for the operation of the buildings to the extent specified and detailed on the drawings and specifications.
- All Civil works in connection with the Electrical Installation including supply, laying and fixing of necessary inserts, hooks, brackets and sleeves etc.
- Any work which can be reasonably inferred as necessary for the safe, satisfactory operation whether such work is specified or shown on the drawings or not.

- Arranging permanent supply including necessary submissions of drawings as required to the supply authorities and arranging inspections and obtaining necessary approvals of all the concerned authorities.

- Cables from LT Panel/Main Distribution Board to Sub Distribution Boards.

- Sub main wiring from Main/Sub Distribution Boards to various final Distribution Boards complete in all respects.

- Point wiring of all lights points, Sump pumps, general power points, metal clad plug & socket outlet points etc. including supply and fixing of light & power accessories etc. complete in all respects.

- Light fixtures complete in all respect.

- Earthing of electrical installation complete in all respects.

- Providing External lighting with underground Al.armoured cable as per the instruction of the Engineer-in-Charge.

- Supply Installation and Testing and Commissioning of all LT Panels, Main
  Connection with main electrical source including all wiring/cabling/accessories and energizing etc. complete.

1.3 Licensed Electrical Contractor

All work shall be carried out by a Class I / II licensed Electrical Contractor who is approved by the Consultant / Client / and who possesses a valid local Electrical Contractor's license employing licensed Supervisors and licensed Electricians, Helpers, as required.

1.4 Standard and Regulations

All equipment's, switchgear, cables and other items of work shall conform to Indian Standard specifications. The installation shall conform in all respects to Indian Standards Code of Practice for Electrical wiring installation IS:732-1989. It shall also be inconformity with the current Indian Electricity Rules and the Regulations and requirements of the Local Electric Supply Authority, Local laws/bylaws in so far as these become applicable to the installation. Where ever these specifications call for a higher standard of materials and/or workmanship than those required by any of the above regulations, these specifications shall take precedence over the said regulations and standard. In general, the materials, equipment and workmanship shall conform to the following Indian Standards, unless otherwise called for.

IS 732 Code of Practice for Electrical Wiring Installation.

IS 1554 1.1 KV Grade, PVC insulated cables – Part I

IS 13947	Degree of Protection provided for enclosures for low voltage switchgear and control gear – Part I
IS 1248	Ammeter and Voltmeter – Part Il
IS 3043	Code of Practice for earthing.
IS 9224	Low voltage fuses.
IS 5216	Safety procedure and practices in electrical work.
IS 1271	Electrical Insulation.
IS 11353	Guide for uniform system of marking and apparatus terminals.
IS 13947	Low voltage switchgear and control gear. Part-II circuit breakers
IS 5424	Rubber mats for electrical purposes.
IS 10242	Installation of cables for low voltage system - Part III -Sec. 12
IS 8623	Factory Assembled Switch Board.
IS 9224	HRC Cartridge fuses - Part-II - Sec. 19
IS 2309	Lightning Protection.
IS 1554	1.1 KV Grade, PVC insulated Cables – Part I.
IS 3072	Installation & maintenance of switch gear – Part I.
IS 2705	Current Transformer – Parts - I to IV
IS 5908	Electrical Installation in buildings, method of measurement.
IS 10322	Luminaries – Parts - I to V
IS 16101: 2012	LED Luminaries with Ballast and LED Lamps IEC TS 62504: 2011
IS 1653	Rigid steel conduits for electrical wiring.
IS 3837	Accessories for the above.
IS 1293	Three pin plugs and socket outlets.
IS 722	AC Electricity meter – Parts - I to V
IS 375, 5578 & 11353	Marking and arrangement of switchgear, bus bars, main connections and auxiliary wiring.
IS 2516	Circuit Breakers – Parts - I to V
IS 8623	Factory built assemblies of switchgear and control gear for voltages up to and including 1000 Volts AC.

IS 7098	Cross linked polyethylene insulated PVC sheathed cables – Parts I & II.
Part I	For working voltages up to and including 1100 Volts.
IS 10810	Method of test for cables.
IS 5424	Rubber Mats for Electrical purposes.
IS 10418	Drums for electric cables.

1.5 Documentation

The indication and/or description of and item on the drawings or in the Specifications, unless otherwise specifically stated, implies an instruction to supply and fix such items.

Notes on drawings referring to individual items of work generally take precedence over specifications, however all discrepancies shall be referred to the Consultant / Client before ordering materials or commencing work.
Drawings show general run of cables, approximate locations of outlets and equipment, utility symbols and schematic diagrams of no dimensional significance. Refer to the Architectural drawings for locations and also obtain approval from the Consultant / Client wherever dimensions are not shown, or locations cannot be determined from the drawings. Do not scale drawings to obtain locations.

1.6 Design Criteria

Electrical materials and equipment shall comply in all respects, as a minimum to the latest Indian Standards Institution's recommendations.
Should any difference arise between ISI and the specification, the requirement of the Specification shall prevail.
The components of submain switchboards, distribution boards and other electrical equipment shall be clearly labelled in English.
Distribution boards shall have circuit schedules fastened to the inside cover of the board showing rating of the circuit breakers, type and number of points and their connected loads.

2.0 Submissions

2.1 Shop Drawings

Shop drawings of the Main and Sub-Main Switchboards, Distribution Boards, Cable Trays, and any other switchboards and panels, layout plans, schemes, conduit layout, outlet wiring, wherever applicable shall be provided and approval shall be obtained from the Consultant / Client before commencing fabrication or procurement.

Any equipment or switchboard manufactured without the written consent of the Consultant / Client prior to the approval drawings shall be liable for rejection.

The Electrical Contractor shall employ a competent, licensed qualified full time electrical foreman/supervisor to direct the work of electrical installations in accordance with the Drawings and Specifications.

3.0 Responsibility

The foreman/supervisor shall be available at all times on the site to receive instructions from the Consultant / Client in the day to day activities throughout the duration of the work.

The foreman/supervisor shall correlate the progress of the work in conjunction with all the relevant requirements of the Supply Authority. The skilled workers employed for the work shall have the requisite qualifications and shall possess competency certificates from the Electrical Inspectorate of Local Administration.

4.0 Application for Power Supply, Fees, Permits and Tests

The Contractor shall be responsible for filing and follow up of application for getting the drawings/scheme approved by the Electrical Inspector and finally the approval by the Electrical Inspector of the whole installation.

4.1 Electricity board Supply to Site

The Contractor shall be responsible for visioning with the **Electricity board** for providing the required KVA electrical supply to the Project site.

4.2 Statutory Approvals

The Contractor shall be responsible for payment of all fees involved with obtaining Statutory Approvals. On completion of the work, the Contractor shall obtain and deliver to the Consultant / Client the relevant final inspector, and approval certificates issued by the Local Electricity Supply Authority.

4.3 Tests

The Consultant / Client shall have full powers to require the materials or works to be tested by an independent agency at the Contractor's expense in order to establish their soundness and adequacy.

The Contractor shall notify the Consultant / Client at least 7 working days before testing of each system. The Consultant / Client reserve the right to be present when such tests are being made.

If the Electrical Inspectorate requires manufacturer's test reports for HT cables, HT switch gear, transformers or any other equipment used in the project, the Contractor shall obtain such approvals at no extra cost to the Client. Such approved reports shall be handed over to the Consultant / Client.

Calibration certificates shall be obtained from the Meter and Relay Testing Department of the Electricity Board for all relays and meters used in the project at no extra cost to the Client.

LT PANELS

1.0 GENERAL

The switchboard shall be metal clad, totally enclosed, rigid, compartmentalized design, floor mounting, air insulated, extensible cubicle type for use on medium voltage power, 3 phase 4 wire 50 cycles system.

The equipment shall be designed for operation in high ambient temperature and high humidity tropical atmospheric conditions. Means shall be provided to facilitate ease of inspection, cleaning and repairs for use in installations where continuity of operation is of prime importance.

One of the panels which are to be used for the project shall be CPRI tested. The selection of panel shall be the decided during the negotiation.

2.0 STANDARDS

The equipment listed below shall conform to the requirements shown:

a. Moulded Case Circuit Breaker (MCCB) - IS 13947 - 1.2/ IEC 947 - 1, 2
b. Contactors- ARE 13947-1, 4 Miniature Circuit Breaker (MCB)-IS 8828-1996/IEC898-1995
c. Residual Current Circuit Breaker (RCCB) - IS 12640 - 1988 / IEC 1008
d. HRC fuse link - IS 9224 and BS 8 :8
e. Current Transformer - IS 2705 and IEC 185
f. Potential Transformer- IS 3156
g. Relay - IS 3231 and IS 8686 (For Static Relays)
h. Indicating Instrument- IS 1248

2.1 Type and Construction

The switchboard shall be of :

a. Sheet steel enclosed, indoor floor mounted free standing cubicle type.
b. Made up of the requisite vertical sections modular type which when coupled together shall form continuous dead front switchboards.
c. Dust, vermin and damp proof and enclosure protection of not less than IP 54.
d. Each feeder/instrument compartment shall be provided with a hinged door interlocked with MCCB inside the compartment such that door can only be opened when MCCB in off position.
e. Readily extendable as required by the addition of vertical sections after removal of the end covers.
f. Switchboards shall have access to the feeders, bus bars, cable termination, cable alley, etc. as required.
g. Main Breakers need to be lockable.

Each vertical section shall comprise:

a. A front framed structure of rolled/folded CRCA sheet steel angle section of minimum 3 mm thickness rigidly bolted together. This structure shall house the components contributing to the major weight of the equipment such as circuit breaker cassettes, main horizontal bus bars, vertical risers and other front mounted accessories.

b. The structure shall be mounted on a rigid base frame of folded CRCA sheet steel of minimum 6 mm thickness and 75 mm height. The design shall ensure that the weight of the components is adequately supported without deformation or loss of alignment during transit or during operation.

c. A cable chamber housing the cable end connections and power or control cable terminations. The design shall ensure generous availability of space for ease of installation and maintenance of cabling and adequate safety for working in one vertical or horizontal section without coming into accidental contact with live parts of the adjacent section.

d. A cover plate at the top of the vertical section, provided with a ventilating hood where necessary. Any aperture for ventilation shall be covered with a perforated sheet having less than 1mm diameter perforations to prevent entry of vermin.

e. Front and rear doors fitted with dust excluding neoprene gaskets with fasteners designed to ensure proper compression of the gaskets. When covers are provided in place of doors generous overlap shall be ensured between sheet steel surfaces with closely spaced fasteners to preclude the entry of dust.

The height of the panel shall not be more than 2000 mm unless otherwise specified and maximum height of switch operating handle shall not be more than 1200mm from FFL. The total depth of the panel shall be adequate to cater for proper cabling space.

Doors shall be of minimum 14 gauge sheet steel and covers and partitions of 160 sheet steel. All sheet steel work forming the exterior of switchboards shall be smoothly finished, levelled and free from flaws. The corners shall be rounded.

The Components in the switchboards shall be so arranged as to facilitate ease of operation and maintenance and at the same time to ensure necessary degree of safety.

Components forming part of the switchboards shall have the following minimum clearances:

a. Between phases 25 mm
b. Between phases and neutral 25 mm
c. Between phases and earth 25 mm
d. Between neutral and earth 19 mm

When, for any reason, the above clearances are not available, suitable insulation barrier/shielding shall be provided. Clearances shall be maintained during normal service conditions.

Creepage distances shall comply to those specified in relevant standards.
All insulating material used in the construction of the equipment shall be of non-hygroscopic material treated to withstand the effects of high humidity, high temperature and tropical ambient service conditions.

Functional units such as circuit breakers, MCCBs, etc. shall be arranged in multi-tier formation except that not more than two air circuit breakers shall be housed in a single vertical section.

Metallic and/or insulated shrouding shall be provided within vertical sections and between adjacent sections to ensure prevention of accidental contact with:

a. Main bus-bars and vertical risers during operation, inspection or maintenance of functional units and front mounted accessories.

b. Cable terminations of one functional unit, when working on those of adjacent units.

All covers providing access to live power equipment or circuits shall be provided with tool operated fasteners to prevent unauthorized access. Provision shall be made for permanently earthing the frames and other metal parts of the switch gear by two independent distinct connections.

Only CRCA steel sheets shall be used for fabricating the cubicle.

Thickness tolerance for sheets shall be as applicable in relevant IS.

2.2 Metal Treatment & Finish

Generally the treatment and finish of the metal surface shall be as per detailed specifications in Clause 8.4 Metal Treatment and Finish.

2.3 Bus bars

The bus bars shall be made of high conductivity high strength E91E aluminium alloy suitable for 440 volts 3phase 4 wires 50 Hz 25 KA unless otherwise specified.

The bus bars shall be suitably supported with non-hygroscopic supports to provide a fault withstand capacity as specified.

High tensile bolts and spring washers shall be provided at all bus bar joints.

Fish plates of equal type and size shall be used at all joints.

The bus bars shall have uniform cross section throughout and shall be capable of carrying the rated current at 433V continuously. The bus bars shall be designed to withstand a temperature rise of 45 Deg C above the ambient. A current density of 1.00 Amp/Sqmm shall not be exceeded for copper bus bars.

The neutral bus bars shall have a continuous rating of at least 100% of the phase bus bars, unless mentioned otherwise.

Bus bars shall be fully sleeved using heat shrunk PVC sleeves appropriately colour coded to identify different phases and neutral bar.

An earth bus of size not less than 40 x 6 mm aluminium shall run throughout the length of switchboard at top or bottom as required.

3.0 BREAKERS

3.2 MCCB - Moulded Case Circuit Breaker

3.2.1 General

MCCB shall conform to IS 13947-1&2/IEC60947-1&2; confirming to test sequence 1 and Isolation as per standard. It should be suitable for Horizontal and Vertical mounting and line load reversibility without any duration. The breaker shall be Double Break type to reduce the let through energy in the event of short circuits. MCCBs shall be designed according to Eco-design complying with ISO 14062 Especially MCCB's materials shall be of hallogen free type. They shall be supplied in recyclable packing complying with European Directives. The manufacturer shall implement non-polluting production processes that do not make use of chlorofluorocarbons, chlorinated hydrocarbons, ink for cardboard markings, etc

The Moulded Case Circuit Breaker incorporated in the switchboard shall be of the current limiting type, cat A, up to 630A and with Short time withstand capacity Icw/0.5 sec of minimum 20kA. MCCB shall be suitable either for Single Phase AC 230V On Three Phase 415V. The MCCB shall be available in fully rated four pole versions for neutral isolation. It shall have tropicalisation as standard feature.

The MCCB shall have Insulation Class II front face. No live parts shall be accessible inside the frame where accessories are fitted in the breaker to ensure safety of the operators. Cross Bolt Termination facility shall be provided to avoid loose termination.

The MCCB cover and case shall be made of high strength heat-resistant and flame-retardant thermosetting insulating material. The operating handle shall be quick make, quick break, trip - free type. The operating handle shall have suitable `ON' `OFF'

`TRIPPED' indicators and in order to ensure suitability for isolation complying with IS 13947-2/IEC60947-2, the operating mechanism shall be designed such that the toggle or the handle can only be in `OFF' position: if the main contacts are actually separated.

All Breakers shall have adjustable overload and short circuit settings.

Overload – adjustable 0.4 to 1 times nominal rating(In)

Short-circuit – adjustable fro 2 – 9 times rated current(Ir)

Earth fault (wherever specified) – adjustable setting with time delay.

3.2.3 Interlocking

MCCB shall be provided with following interlocking devices for interlocking the door of a switchboard.
a. Handle interlock to prevent unnecessary manipulations of the breaker.
b. Door interlock to prevent door being opened when breaker is in ON position.

4.0 Miniature Circuit Breakers [MCB]

MCB shall be in 1,2,3 or 4, pole versions. MCB casing shall be made of self-extinguishing, tropicalized material.

MCB shall comply with IS 8828-1996/1EC 898-1995. It shall be suitable for use in frequency range 40Hz to 60Hz and shall accommodate AC/DC supply according to requirements. It shall have a trip-free mechanism and toggle shall give a positive contact indication. It shall be suitable for mounting on 35mm DIN rail/surface mounting.

Line supply may be connected to either top or bottom terminals i.e. there shall be no line-load restriction. Degree of protection, when the MCB is flush mounted, shall be IP40. MCB shall be supplied with clamping terminals fully open. Contact closing shall be independent of the speed of the operator. The breaking capacity of the MCB shall be 10kA. The MCB shall be capable of being used as Incomer Circuit Breaker and shall be suitable for use as an isolator. In case of multiple MCBs in a single location (DB), it shall be possible to remove any MCB without having to disturb other MCB's in the vicinity.

4.1 Surge Diverters

Surge diverters shall be provided as specified in Section 16670 Lightning Protection.

4.2 Coordination Study in LV Network

LV Switchgear Manufacturer shall submit coordinated & Discriminated solution for LV Network protection devices i.e. MCCB, & MCB for all Incoming and outgoing devices for all Panels/ DB`s as per BOQ with the help of published discrimination tables. Total discrimination shall be provided up to the short circuit breaking capacity of most downstream circuit Breakers.

4.3 Current Transformers

Current transformers shall comply with the requirements of IS 2705. They shall have ratios, outputs and accuracy as specified/required. All CT's shall be of resin cast type unless otherwise specifically called for.
All CTs shall be of bar type primary or suitable for the cable given type and size.
For all the CTs suitable type and size clamps are to be supplied for mounting in the switchboards.
Polarities and terminal markings of primary and secondary shall be clearly marked on all CTs.

4.4 Specifications for CTs

a) Current Ratios:
   1. Primary: As per feeder ratings
   2. Secondary: 5A
b) Type: Resin Cast

4.5 Potential Transformers

All the Potential Transformers shall comply with the requirements of IS 3156 latest edition. All PT's shall be resin cast type and shall have Voltage ratios, output and accuracy class as Specified in Data Sheer.

All PT's shall be single phase, dry type suitable for mounting inside the panel or cubicles. Clamps, brackets and supports required for the mounting shall be supplied along with PT.

Polarities and Terminal markings shall be clearly marked in all PT's. Name plate indicating, voltage ratio, burden, accuracy class, type, serial number, make and model plus other related data, shall be provided.

A common earth terminal for earthing of core, bolts, clamps (noncurrent carrying metal parts) etc., shall be provided.

For 415V system, Specification of the PT's shall be as follows:

a) Voltage ratio : 415V/110V
b) Type : Resin cast

c) Burden : 100VA
d) Class (Metering/Protection) : 0.5/3P.

4.6 Instruments and Meters

All instruments and meters shall be enclosed in dust proof, moisture resistant black finished cases and shall be suitable for tropical use. They shall be calibrated to read directly the primary quantities. They shall be accurately adjusted and calibrated at Works and shall have means of calibration, check and adjustment at site.

4.7 Indicating Instruments

Indicating instruments shall be flush mounted with digital displays. The indicating instruments shall conform to IS:1248 and shall have on an accuracy class of 1.5 or better.

The Ammeter and Wattmeter current coils shall withstand 200% of rated current continuously and 10 times the rated current for 0.5 seconds without loss of accuracy. Voltmeter and Wattmeter potential coils shall withstand 120% of rated voltage continuously and twice the rated voltage for 0.5 sec. without loss of accuracy.

4.8 Voltmeter

Voltmeter shall be suitable for operating directly on LT supply voltage 433V. 50Hz AC. with a scale indicating directly as for LT metering. 0-500V Voltmeter shall be used.
All Voltmeters are 96mm x 96mm, suitable for mounting on the panel.
Type, Serial Number, accuracy class and borders of the Voltmeter shall be indicated on the dial.

4.9 Ammeter

All the ammeters shall be CT operated (5A) with a dial marked for line currents.
Type, Serial Number, Accuracy class, Operating Current, Burden etc., shall be indicated on the dial.
All Ammeter shall be digital, panel mounting type and shall be provided with zero adjustment.
All ammeters shall b 96mm x 96mm, suitable for mounting on the panel.

4.10 Energy Meters

WATT HOUR METERS shall be of the three phase two element type suitable for measurement of unbalanced loads in three phase four wire circuits. They shall be of draw out type and suitable for flush mounting with

back connecting terminals. The meter shall have glass covers removable from the front of the panel, without dismantling the meter from the panel. All permanent magnets shall of the non-ageing type. The meter shall be fitted with a separate test block for testing of the reverse direction. They shall be provided with a separate test block for testing of the meters without disturbing the CT and PT secondary connections. They shall have cyclometer type of register. At least two sealing studs for sealing purposes shall be provided. The Energy Meter shall be connected to the secondaries of potential transformers and current transformers rated for 110 3 Volts and 5 Amp. respectively. These meters shall conform to IS: 13010 and have an accuracy of class 1.0 or better for KWH meter and 3.0.

4.11 Cable Terminations

Cable entries and terminals shall be provided in the switchboard to suit the number, type and size of copper conductor power cables and copper conductor control cable specified in the detailed specifications.

Provision shall be made for top or bottom entry of cables as required. Generous size of cabling chambers shall be provided with the position of cable gland and terminals such that cables can be easily and safely terminated.
Barriers or shrouds shall be provided to permit safe working at the terminals of one circuit without accidentally touching that of another live circuit.

Cable risers shall be adequately supported to withstand the effects of rated short circuit currents without damage and without causing secondary faults.
Cable sockets shall be of tinned copper and of the crimping type.

4.12 Control Wiring

All control wiring shall be carried out with 660/1100V grade single core PVC cable having stranded copper conductors with minimum cross section of 1.5Sqmm for potential circuits and 2.5Sqmm for current transformer circuits.

Wires shall be identified by numbered ferrules at each end. The ferrules shall be of ring type and of non-deteriorating material. They shall be firmly located on each termination so as to prevent free movement.
All control circuit fuses shall be mounted for easy accessibility.

4.13 Terminal Blocks

Terminal blocks shall be of 500 Volts grade and of stud/screw less type.
Terminal blocks shall have a minimum current rating of 10 Amps and shall be shrouded. Provisions shall be made for label inscriptions.
There shall be a minimum clearance of 250mm between the first row of terminal blocks and the associated cable @land plate. Also, the clearance between two rows of terminal blocks shall be a minimum of 150mm.

4.14 Relays

All Relays shall conform to the requirement of IS : 3231/IS 8686 or other applicable approved standards Relays
All AC Relays shall be suitable for operation at 50Hz. AC Voltage operated relays shall be suitable for 110v 3 Volts PT secondary and Current operated relays for 5Amp CT secondary, as specified in this specification. Voltage operated relays shall have adequate thermal capacity for continuous operation.

5.0 General

Every switchboard, switchboard control contactor, time switch, relay, indicator lamp, meter.motor starter, link and any control or protection equipment within or on a switchboard shall be clearly and accurately labelled.

Labels shall be engraved laminated plastic or photo anodised rigid aluminium and shall comply with the following requirements.
Engraved lettering shall be black on a white background, except that the label for a main switch shall have red lettering on a white background, and warning and caution labels shall have white lettering on a red background.

The minimum height of lettering shall be 3mm and of sufficient definition to allow easy reading.

5.1 Fixing of Labels

Labels shall be securely fixed by:
(a) Screws and adhesive, or
(b) Fixed in an extruded aluminium section which shall be countersunk screw fixed or countersunk riveted to the panel.

5.2 Labels on Exterior of Switchboards and Schedules

All switchboards shall be labelled with the manufacturer's name.
The minimum height of lettering shall be 6 mm.
For identification of final sub circuits, a typed schedule, cross-referenced to the lighting and power layout plans shall be provided.

5.3 Warning Labels

A warning label shall be provided on the front cover near the main switch or local main switch and in a prominent position within each section of the switchboard. The label shall have the following wording in 6mm high lettering:

6.0 Tests

6.1 General

The routine tests shall be conducted as per IS standards on each Power Control Centre and shall comprise:
Inspection of the Switchboards including inspection of wiring and electrical operational and functional tests where necessary.
Checking of protective measures and electrical continuity of the protective circuits.

6.2 Dielectric Tests

Insulation resistance of the power circuit between each pole and the earth and that between the poles shall be measured.
Insulation resistance of all secondary wiring between phase and earth shall be measured. Insulation test shall be carried out both before and after high voltage test.

6.3 High Voltage Test

A high voltage test with 2.5 kV for power circuit and 1.5kV for Control Circuit, Duration one minute shall be applied between each pole and earth and between poles. Test certificate shall be submitted along with panel.

7.0 Storing, Erection and Commissioning

7.1 Storing

The panels shall be stored in a well-ventilated dry place.
Suitable polythene covers shall be pro-aided for necessary protection against moisture, dust, and vermin.

7.2 Erection

Switchboards shall be installed over trench/floor as required. Suitable grouping holes shall be provided in the flooring. Suitable MS base channel shall be embedded in the flooring on which the panel can directly be installed the switchboards shall be properly aligned and bolted to the flooring by at least four bolts. Cables shall be terminated on the bottom plate or top plate as the case may be, by using brass compression glands. The individual cables as shall then be led through the panel to the required feeder compartments for necessary terminations.

7.3 Pre-commissioning Tests

The panels shall be commissioned only after successful completion of the following tests. The tests shall be carried out in the presence of the Consultant / Client.

(a) All main and auxiliary bus bar connections shall be checked and tightened.
(b) All wiring terminations and bus bar joints shall be checked and tightened.
(c) Wiring shall be checked to ensure that it is according to the approved drawing.
(d) All wiring shall be tested for insulation resistance by a 500 volt merger
(e) Phase rotation tests shall be conducted.
(f) Make, type and ratings of all components shall be checked and verified as per the approved drawings.

7.4 Metal Treatment and Finish

All steel work used in this Contract shall in general, undergo the following process of treatment and finish.

(a) Degreasing: by hot alkaline degreasing solution followed by cold water rinsing to remove traces of alkaline solution.
(b) Phosphating: by a recognized phosphating process to facilitate durable coating of the paint on the metal surfaces and also to prevent the spread of rust in the event of the paint film being mechanically damaged. This again shall be followed by hot water rinsing to remove traces of phosphate solution.
(c) Drying in dust-free atmosphere.
(d) Primer: Primer coating with a coat of corrosion resistant primer applied on wet surface.
(e) Finish coat: Two finishing coats of stoving synthetic enamel paint to the specified shade of IS 5. Both the finish coats shall be only spray painted.
(f) For outdoor units the finishing coat shall be of weather resistant stoving epoxy paint of specified shade of IS5.

7.5 Warranty and Maintenance

The installation shall be guaranteed against faulty workmanship for minimum of one year from the date of practical completion. All faulty workmanship shall be replaced and restored to full operation at no cost to the Client within the guarantee period.

Manufacturer's guarantees and warranties shall be obtained in accordance with Clause 9.11 of the Preliminaries. The warranty period shall be for eighteen months commencing from the date of installation or twelve months from the date of practical completion, whichever is the first to occur.

LT CABLES

1.0 SCOPE:

This specification covers the design, manufacture, testing at works, inspection and delivery at site of XLPE insulated and PVC power and Control cables.

2.0 STANDARDS:

The cables covered by this specification shall, unless otherwise stated, be designed manufactured and tested in accordance with the latest revisions of relevant Indian standards.

IS-694	:	PVC insulated cables for working voltages upto and including 1100 volts.
IS-1554	:	PVC insulated heavy duty cables for working voltages upto and including 1100 volts.
IS-3961	:	Recommended current ratings for PVC insulating and PVC sheathed heavy-duty cables.
IS-8130	:	Conductors for insulated electric cables and flexible cords.
IS-5831	:	PVC insulation and sheath of Electric cables.
IS-3975	:	Mild steel wires, strips and tapes for armouring of cables.
IS-7098	:	Cross linked polyethylene insulated PVC sheathed cables.
IS-6130	:	Conductors for insulated electric cables and flexible cords

3.0 CONDUCTOR:

The conductor shall be Aluminum / Copper as specified in the Schedule of Quantities. It shall be smooth, uniform in quality and free from scale and other defects. The stranded conductor shall be clean and reasonably uniform in size and shape. The conductor shall be either circular or shaped.

4.0 CONDUCTOR SHIELD:

Conductor shield shall be extruded in the same operation as the insulation. The semi-conductor polymer shall be cross linked.

5.0 INSULATION:

a) Insulation shall be cross linked polyethylene and it shall preferably be gas-cured for XLPE cable
b) Insulation shall be PVC for PVC cable as specified in the Schedule of quantities.

5.1 OUTER SHEATH:

All cables specified in the Schedule of Quantities shall have Outer sheath confirming to IS Standards

6.0 INSULATION SHIELD:

This shall preferably be of the strippable, triple-extruded thermoset type.

7.0 ARMOUR:

The armour may be of galvanized steel wires or galvanized steel strips

8.0 SERVING:

The cable serving shall protect the cable sheath and armour from electrolysis caused by stray currents, and from galvanic action. It shall also protect the cable from mechanical damage and corrosion.

9.0 GENERAL:

The cable shall withstand all mechanical and thermal stresses under steady state and transient operating conditions.

10.0 TEMPERATURE RISE:

The maximum conductor temperature shall not exceed 90 degree C during continuous operation at full rated current. The temperature after short circuit for 1.0 second shall not exceed 250 degree C with initial conductor temperature of 90 degree C.

Bidder shall give the following information in the Bid for each conductor cross section specified.

a. Rated continuous current

b. Rated 1.0 second short circuit / short time current

Rating factor shall be given by the Bidder for the following:

a. Variation in ground temperature

b. Variation in soil thermal resistively

c. Variation of Ambient Temperature

d. For the cables laid side by side, at ID spacing and in Tier formation.

The Bidder shall also indicate the percentage overload that the cable can carry and its duration, when operating initially at a conductor temperature of 90 degree C, with peak conductor temperature of 130 degree C.

12.0 TESTS:

12.1 Routine Tests: (To be performed on each drum length)

All tests as per relevant IS shall be conducted and shall be witnessed by the Client.

12.2 Type Tests:

The Bidder shall furnish two (2) copies of type test certificates conducted on similar cables along with the Bid.

a. Partial discharge test

b. Bending test followed by partial discharge test

c. Dielectric power factor as function of voltage

d. Dielectric power factor as function of temperature

e. Heating cycle test followed by dielectric power factor as a function of voltage and partial discharge tests.

f. Impulse withstand test

g. High voltage test.

13.0 SPECIFICATION FOR PVC ARMOURED CABLE:

All codes and standards mean the latest. Where not specified otherwise the installation shall generally follow the Indian Standard codes of practice or the British Standard Codes of practice where Indian standards are not available.

13.1 Cables:

All cables shall be 1100 Volt grade PVC insulated, sheathed with or without steel armouring as specified and with an outer PVC protective sheath. Cables shall have high conductivity stranded aluminium or copper conductors and cores shall be colour coded to the Indian Standards.

All cables shall be new without any kinds or visible damage. The manufacturers name, insulating material, conductor size and voltage class shall be marked on the surface of the cable at every 600 mm centers.

13.2 INSTALLATION:

Cables shall be laid in the routes marked in the drawings. Where the route is not marked, the contractor shall mark it out on the drawings and also on the site and

obtain the approval of the Architect / Client before laying the cable. Procurement of cables shall be on the basis of actual site measurements and the quantities shown on the schedule of work shall be regarded as a guide.

Cables shall be bent to a radius not less than 12 times the overall diameter of the cable, or in accordance with the manufacturer's recommendations whichever is higher.

In case of direct buried cables, the cable route shall be parallel or perpendicular to roadways, walls, etc., Cables shall be laid in an excavated, graded trench, over a sand cushion to provide protection against abrasion. Width of excavated trenches shall be as per drawings.

13.2.1 Cables in Outdoor Trenches

Cables shall be laid in outdoor trenches wherever called for. The depth of the trenches shall not be less than 75 cm from the final ground level. The width of the trenches shall suit easy laying of cable. Where more than one cable has to be laid in the same trench, all attempts shall be made to keep the axial distance between successive cables to be at least 1d where'd' is the diameter of the bigger cable. The trenches shall be cut square with vertical sidewalls and with uniform depth. Wherever cables are bent, the minimum bending radius shall not be less than 12 times the diameter of the cable. After the cable is laid and straightened, it shall be covered with sand cushion. Over this a course of cable protection tiles or burnt brick shall be provided on either sides and above. Trench shall be back filled with earth and consolidated. Cables shall be laid in Hume pipes / stoneware pipes at all road crossings & wall entries. Approved cable markers made of CI indicating the voltage, no. of cables and the direction of run of the cables shall be installed at regular intervals.

13.2.2 Cable in Indoor Trenches

Cables shall be laid in indoor trenches wherever specified. Suitable angle iron brackets, clamps, hoods and saddles shall be used for securing the cable in position.

13.3 Installation

a) Cable trays shall be installed as a complete system. Trays shall be supported properly from the building structure. The entire cable tray system shall be rigid.

b) Each run of the cable tray shall be completed before the installation of cables.

c) Cable trays shall be exposed and accessible.

13.4 Jointing And Terminations

Cable jointing shall be done as per the recommendations of the cable manufacturer. Jointing shall be done by qualified cable jointers.

Each termination shall be carried out using brass compression glands and cable sockets. Hydraulic crimping tool shall be used for making the end terminations. Cable gland shall be bonded to the earth by using suitable size G.I. wire/tape.

Suitable identification tags with the feeder designation inscribed on an aluminium/G.I. sheet shall be tied to either ends of each cable.

13.5 Testing

Cables shall be tested at factory as per the requirements of IS 1554 Part I. The tests shall incorporate routine tests, type tests and acceptance tests. Copy of such test certificates shall be furnished to the Consultants / Client prior to dispatch.

14.0 Aluminium Cable Termination Methods

14.1 General

For all aluminium cables, the oxide shall be removed by thoroughly wire-brushing the bare end of the cable. After brushing, a liberal coating of an approved oxide-inhibiting, moisture-excluding thermally stable grease shall be applied, and the cable shall be wire-brushed again through the grease. Cable strands shall not be separated before brushing.

Bare aluminium lugs, ferrules and other connectors, unless factory-tinned or factory pre-filled with inhibiting grease, shall be wire-brushed and grease coated in the same way as cables.

Before making any joints or terminations in aluminium cables, the Contractor shall submit the proposed method for the Consultant / Client approval. Notice of at least three working days shall be given before making any joints or terminations, to enable the Consultant / Client to witness the work.

14.2 Acceptable Termination Methods

Aluminum to aluminum connections shall be made by one of the following methods:

For compression connections on stranded cables, a hexagonal die shall be used, on solid conductor cables, indent type dies shall be used, with at least two indentations per cable connection. Lugs of ferrules shall be selected to suit the size and shape of the conductor. Compression dies shall be selected to suit the particular lug or ferrule.

All nuts shall be adequately torque tightened to manufacturer's recommended levels.

14.3 Road Crossings

All pipelines laid below roads shall be taken through suitable underground trenches. The size of trenches shall be as per drawings.

14.4 Construction across Roads

All works across roads shall be carried out as per the directions of the Development Manager. Necessary safety measures shall be taken to divert traffic. Care shall be taken not to disturb electrical and communication cables.

14.5 Protection of Existing Services

All pipes, water mains, cables, etc. met with during the course of excavation shall be carefully protected and supported. In any case damage is caused, the same shall be made good at no extra cost, failing which necessary rectification will be done by Development Manager at the risk and cost of the Contractor.

14.6 Refilling:

The filling shall be done in layers not exceeding 15mm in depth. Each layer shall be watered, rammed and compacted. Ramming shall be done with iron rammers where possible and with blunt end of the crow bars where rammers cannot be used. Special care shall be taken to ensure that no damage is caused to the pipes, drains, masonry or concrete in the trenches.

14.7 Contractor Shall Restore Settlement and Damages:

The Contractor shall at his own cost make good promptly during the whole period the works are in hand, any settlements that may occur in the surfaces or roads, beams, footpaths, gardens, open spaces etc. Whether public or private caused by his trenches or by his other excavations due to not using the method of compaction as given in clause 3/2.8.3.5 and he shall be liable for any accidents caused thereby.

He shall also at his own expense and charges, repair and make good any damage done to the building and other properties.

14.8 Testing

Cables shall be tested at the factory as per the requirements of 1S 1554 Part 1. The tests shall incorporate routine tests, type tests and acceptance tests. A copy of such test certificates shall be furnished to the Consultant / Client prior to dispatch.

MV cables shall be tested upon installation with a 500 V Megger and the following readings established. 1) Continuity on all phases, 2) Insulation Resistance

All test readings shall be recorded in the separate book and the same to be handed over to the Client.

MCB DISTRIBUTION BOARDS

1.1 **Approvals and Submissions**

Distribution boards shall be deemed to be approved when a sample has been inspected and when the sample workshop drawings have been approved, by the Consultant / Client.

1.2 **General** Distribution boards shall be suitable for 433 volts, 3 phase AC supply and 240 volts single phase AC supply, as required. Distribution boards shall generally conform to IS:2675 or BS:214.

1.3 **Type and Construction**

All the distribution boards shall be of Class IP 65 (Outdoor) with approved type of components of recommended make of MCB. The sheet steel MCB DB shall be flush mounting type unless otherwise specified and shall consist of MCB/ELCB as incomer and MCB as outgoings. The short circuit rating of MCB shall be 10kA as a minimum, unless otherwise specified. All DBs shall be of 7 segment type.

1.4 **Bus Bars**

Suitable bus bars made of high conductivity aluminium strips and mounted on non-hygroscopic insulating supports shall be provided.

1.5 **Circuit Breakers**

Miniature Circuit Breaker shall comply with IS-8828-1996/IEC898-1995. Miniature circuit breakers shall be quick make and break type for 240/415 VAC 50 Hz application with magnetic thermal release for over current and short circuit protection. The breaking capacity shall not be less than 10 KA at 415 VAC. MCBs shall be DIN mounted. The MCB shall be Current Limiting type (Class-3). MCBs shall be classified (B, C, D ref IS standard) as per their Tripping Characteristic curves defined by the manufacturer. The MCB shall have the minimum power loss (Watts) per pole defined as per the IS/IEC and the manufacturer shall publish the values.MCB shall ensure complete electrical isolation & downstream circuit or equipment when the MCB is switched OFF.

The housing shall be heat resistant and having a high impact strength. The terminals shall be protected against finger contact to IP20 Degree of

protection. All DP, TP, TPN and 4 Pole miniature circuit breakers shall have a common trip bar independent to the external operating handle.

1.6 **HRC Fuses**

Rating of the fuses and carriers shall be as per drawings. Fuses carriers and bases conform to IS: 1300. They shall be non-flammable and non-hygroscopic, with hard finish.

HRC fuses are unacceptable for power circuits.

1.7 **Surge Diverters**

Surge diverters shall be provided as specified in 16670 Lightning Protection.

1.8 **Safety and Interlocks**

All the live parts shall be shrouded such that accidental contacts with live parts are totally avoided. Distribution boards shall be provided with a front hinged door. Distribution boards interior assembly shall be dead front with the front cover removed. Incoming lugs shall be shrouded. Suitable insulating barrier made of are resistant material shall be provided for phase separation. The ends of the bus structures shall also be shrouded.

1.9 **Cabinet Design**

The Distribution Board cabinet shall be totally enclosed type with dust and vermin proof construction. The cabinet shall be stove enamelled. The interior surface shall be finished to an off-white shade. The interior components shall be mounted on a separate sheet steel which is mounted and locked onto the studs provided inside the cabinet. Over this, a cover made of HYLAM sheet or stove enamelled sheet shall be provided with slots for operating handle of breakers. The cabinet shall be equipped with a front door having a spring latch and a vault lock. Cabinets shall have detachable glands plates at both top and bottom with knock out holes of suitable numbers.

1.10 **Terminals**

Distribution Boards shall be provided with an approved make terminal block of adequate size to receive mains and outgoing circuits. The location of the terminal block shall be so located that crowding of wires in the proximity of live parts is avoided. A neutral link having a rating equal to that of phase bus shall also be provided.

WIRING

1. **Wiring System in MS Channel/Tubes.**

2. **Type and Size of MS U-Tubes.**

All MS Tubes shall be of approved gauge (sizes up to 32 mm). The maximum number of PVC insulated 1100 volts grade copper conductor cable that can be drawn in tubes of various sizes shall be as per IS code.

3. **Fixing of MS Channel/Tubes.**

Tubes/Channel shall be fixed by heavy gauge clamps or welding, secured in a suitable and approved manner at an interval of not more than one meter. Where tubes are to be laid along the trusses, clamps made of MS. Whereas it is not possible to drill holes in the truss members suitable clamps with bolts and nuts shall be used etc. The same shall be secured by means (as per instruction of Engineer -in-Charge).

4. **Wiring.**

All internal wiring shall be carried out with PVC insulated multi-stranded FRLS copper wires of 1100 volts grade. The circuit wiring for points shall be carried out in looping in system and no joint shall be allowed in the length of the conductors; Circuit wiring shall be laid in separate channel/tubes originating from distribution board to switch board for light fittings. Looping circuit wiring shall be drawn in same conduit as for point wiring. Each circuit shall have a separate neutral wire. Neutral looping shall be carried out from point to point or switch boards. A separate earth wire shall be wiring for light Point/ exhaust fan point shall be 2 runs of 2.5 sqmm and 1 run of 1.5 Sq. mm FRLS insulated copper conductor single core cable. Before the wires are drawn into the channel, the channel shall be thoroughly cleaned of moisture, dust and dirt. Drawing & jointing of copper conductor wires & cables shall be as per CPWD specifications.

5. **Joints.**

All joints shall be made at mains circuit drawn only.

6. **Load Balancing.**

Balancing of circuits in three phase installation shall be planned before the commencement of wiring and shall be strictly adhered to.

7. **Conductor Size.**

Wiring shall be carried out as indicated in the drawing.

Maximum Number of PVC Insulated 650/1100 Grade

Aluminum/Copper Conductor Cable Conforming to IS: 694- 1990

Nominal Cross Sectional area of conductor in sq.mm	20m m		25m		32m		38m		51m		64m	
	s	b	s	b	s	b	s	b	s	b	s	b
1	**2**	**3**	**4**	**5**	**6**	**7**	**8**	**9**	**10**	**11**	**12**	**13**
1.5	5	4	10	8	18	12						
2.5	5	3	8	6	12	10						
4	3	2	6	5	10	8						
6	2		5	4	8	7						
10	2		4	3	6	5	8	6				
16			2	2	3	3	6	5	10	7	12	8
25					3	2	5	3	8	6	9	7
35							3	2	6	5	8	6
50									5	3	6	5
70									4	3	5	4

NOTE:

1. The above table shows the maximum capacity of conduits for a simultaneous drawing in of cables.

2. The columns headed ‘S’ apply to runs of conduits which have distance not exceeding 4.25m between draw in boxes and which do not deflect from the straight by an angle of more than 15 degrees. The columns headed 'B' apply to runs of conduit which deflect from the straight by an angle of more than 15 degrees.

LED LIGHT FIXTURES

1.0 Luminaries

1.1 **General**

Luminaries shall be installed in an approved manner and shall be complete with LED Luminaries with LED lamps and accessories necessary for their proper functioning and shall be in accordance with IS 16101 : 2012 / IEC

TS 62504 : 2011, LED Luminaries with Ballast and LED Lamps, and the provisions indicated herein.

All discharge luminaries shall be power factor corrected to a minimum of 0.8 lagging. Lead lag circuits or blocking Inductors shall be incorporated where indicated.

1.2 **Supply of Luminaries**

Luminaries shall be purchased from a reputable supplier and shall be manufactured in accordance with relevant standards.

The catalogue numbers or trade designations for luminaries used in the schedule of equipment are intended to indicate the required quality, style and performance of the luminaries. Where alternative luminaries are offered all performance data shall be submitted to the Consultant / Developer for approval. If requested, by the Consultant / Developer, a sample shall be submitted for approval.

2.0 **Installation of Luminaries**

2.1 **General**

All screws, clamps, packing, etc., necessary for the proper fixing of luminaries shall be provided by the Contractor as part of the works. Packing pieces of approved material shall be fitted where required to level the luminaries and to prevent distortion.

Where painted surfaces are damaged, they shall be made good by painting to the same standard as the original paintwork.
Fittings are to be installed subject to the approval of the Consultant / Developer. All luminaries shall be effectively earthed.

LED Lighting Fixture

a. The Contractor shall supply the light fixture as per instruction of Engineer-in-Charge and install lighting fixtures including but not limited to lamps, ballasts, accessories fixing hardware necessary for installations, as shown in the Drawings, as required, and as here in specified.

b. All fixtures shall be delivered to the building complete with suspension accessories, canopies, hickeys casing, sockets, holders, reflectors, ballasts, diffusing material, louvers, plaster frames, recessing boxes, etc. all wired and assembled as indicated.

c. Full-size shop detailed drawings of special fixture or lighting equipment, where called for in the fixtures schedule shall be submitted to the Engineer-in-Charge for approval.

d. Fixtures, housing, frame or canopy, shall provide a suitable cover for fixture outlet box or fixture opening

e. Fixtures shall comply with all applicable requirements as here in outlined unless otherwise specified or shown on the drawings.

f. Fixtures shall have manufacturer's name and the factory inspection label.

g. Fixtures shall be completely wired and constructed to comply with the IEEE wiring regulations requirements for lighting fixtures, unless otherwise specified.

h. Installation, testing and commissioning of following type of light fixtures as per drawings and specifications with all other accessories such as supporting rods / frames, anchor fasteners, necessary hardware etc.

ILLUMINATION LEVELS:

Lighting system shall be designed for 240 V; 1Ph; 50Hz; A.C. Supply. Lighting system shall be designed with illumination levels as follows:

Given below are the recommended illumination levels and type of fittings for different area with its classification.

Area	Lox Level	Type of Lamps
Corridor Stairs	150	LED
Electrical Rooms	200	LED
Packing Area	150	LED
Lobby/Lounge	150	LED

EARTHING

Supply and installation of all Earth Electrodes as enumerated in earthling schematic.

Supply installation of earthling conductors for the electrical works covered under this scope of work.

Supply and installation of Rigid PVC pipes up to the nearest shaft or cut in building or the cable trench in the vicinity to enable lying of earthling strips by other agencies at a later date.

1.0 **Earthing Electrodes**

Earthing electrodes shall be designed as per the requirements of clause 17.2 of IS: 3043. The number and size of earth electrodes shall be calculated so that under fault conditions no electrode is loaded above its maximum permissible current density. The resistance of earth electrodes shall not exceed one Ohm.

The detail of earth electrodes shown in the drawing is indicative. The Contractor shall provide required additional chemical as per the

manufacturer's recommendation to contain the ohmic value **at no extra cost.**

Earthing electrodes of plate type shall be used. The choice of pipe or plate electrode shall be decided according to the anticipated fault level of the network and local soil conditions.

All grounding electrodes shall be tested with earth meggers and grounding resistances are recorded.

1.1 **Plate Electrode**

Plate electrodes shall be made of copper plate of 3.15 mm thick and 60 x 60 cm size. The plate shall be buried vertically in ground at a depth of not less than 2 meters to the top of the plate, the plate being encased in salt and charcoal to a thickness of 15 cm all around. It is preferable to bury the electrode to a depth where subsoil water is present. Earth leads to the electrode shall be of copper and shall be laid in a GI pipe and connected to the plate electrode with brass, bolts, nuts and washers. A GI pipe of not less than 25 mm dia. shall be placed vertically over the plate and terminated in a funnel at 5 cms above the ground. The funnel shall be provided with a wire mesh. The funnel shall be enclosed in masonry chamber of 45 cm x 45 cm x 30 cm dimensions. The chamber shall be provided with GI frame and GI cover. The earth station shall also be provided with a suitable permanent identification using painting.

Earth Enhancing Material shall be supplied in bags consists of Earth Enhancing chemical for good conductivity.

Method of Installation:

One number or three numbers as per Bill of material, Copper bonded Earth Rod shall be placed in an Earth Pit of 10-inch diameter. The earth pit has to be connected by means of Copper Earth Rod Clamp. The whole setup is treated by Ground Enhancing Material (GEM).

The resistance of earth electrodes shall not exceed one Ohm.

Precautions

Earthing system shall be mechanically robust and the joints shall be capable of retaining low resistance, even after passage of fault currents.

Joints shall be welded, bolted or double-riveted. All welded joints are painted with cold zinc galvanizing paint. All the joints shall be mechanically and electrically, continuous and effective. Joints shall be protected against corrosion.

For Copper Strips, the joints have to be bolted with brass Nut & Bolts and then brazed.

Testing

On the completion of the entire installation, tests on the earth resistance of the electrodes shall be conducted using an earth-testing Megger.

All meters, instruments and labour required for the tests shall be provided by the Contractor. The test results shall be submitted in triplicate to the AE / Owner for approval. Tests shall be conducted in the presence of AE / Owner.

Ground resistance test shall be conducted to verify impedance of the electrical ground systems.
Each earth Pit should have a test link to measure the earth pit value.

INSTALLATION, TESTING AND COMMISSIONING

1.0 TESTS:

The routine tests shall be conducted as per IS standards .

- Inspection of the Switchboards including inspection of wiring and electrical operational / functional tests where necessary.
- Checking of protective measures and electrical continuity of the protective circuits.

FUNCTIONAL TESTS:

a) All relays & meters shall be tested by secondary injection.

b) Functional test for breaker interlocking & other circuits shall be done with aux.supply

DIELECTRIC TESTS:

a) Insulation resistance of the power circuit between each phase and the earth and that between the phases shall be measured.

b) Insulation resistance of all secondary wiring between phase and earth shall be measured. Insulation test shall be carried out both before and after high voltage test.

HIGH VOLTAGE TEST:

A high voltage test shall be done for HT & LT switchboards as per the relevant IS standards for a duration one minute.

Test certificate shall be submitted along with panel.

2.0 STORING, ERECTION AND COMMISSIONING:

STORING:

The panels shall be stored in a well-ventilated dry place. Suitable polythene covers shall be provided for necessary protection against moisture, dust and vermin.

ERECTION:

Switchboards shall be installed over trench/floor as required. Suitable grouting holes shall be provided in the flooring. Suitable MS base channel shall be embedded in the flooring on which the panel can directly be installed. The switch boards shall be properly aligned and bolted to the flooring by at least four bolts. Cables shall be terminated on the bottom plate or top plate as the case may be, by using brass double compression glands. The individual cables shall then be led

through the panel to the required feeder compartments for necessary terminations. The cables shall be clamped to the supporting arrangement. Either side, the switchboard earth bus shall be connected to the local earth grid.

The base channel used for erection of panels shall form part of the cost of the panel and shall not be measured or paid separately.

3.0 PRE-COMMISSION TESTS:

The panels shall be commissioned only after successful completion of the following tests. The test shall be carried in the presence of Client/Consultant's representative.

a) All main and auxiliary bus bar connections shall be checked and tightened.

b) All wiring terminations and bus bar joints shall be checked and tightened.

c) Wiring shall be checked to ensure that it is according to the approved drawing.

d) All wiring shall be tested for insulation resistance by 1000V megger.

e) Phase rotation tests shall be conducted.

f) Suitable injection tests shall be applied to all the measuring instruments to establish the correctness and accuracy of calibration and working order if required by the Client/Consultant.

g) All relays and protective devices shall be tested for correctness of settings and operation by introducing a current generator and an ammeter in the circuit or shall produce calibration/test certificate as required by the Client/Inspectorate/consultant.

h) Functional tests on all feeders.

i) Makes, type and ratings of all components shall be checked / verified as per approved drawings.

SCHEDULE- C' **-Deleted-**

SCHEDULE- 'D' STRUCTURAL STEEL WORK

5.0 Technical Specification for Structural Steel Works

5.1 Scope of Specification

This specification covers the scope of work of structural steel works, submittals by the Contractor, applicable codes of practice for structural steel work and the specifications for the materials to be used, including steel, bolts & nuts, washers etc and the storage thereof.

5.2 Scope of Work

The specification covers the scope of work for structural steel work, submittals by the contractor, applicable code of practice for structural steel work and the specification for the materials to be used, including, bolts

The structural steel work shall cover, but shall not be limited to the following:

i. Preparation of complete detailed fabrication drawings and erection marking drawing based on the design drawings, required for all the permanent and temporary structures (incidental to work) for approval of Engineer-in-Charge before execution- to be submitted for approval of Engineer-in-Charge within 15 days of issue of Good for Construction Drawings.

ii. Submittal of revised design, with calculations and detailed fabrication drawings, in case any change in the drawings of the designed sections is required by Contractor for approval by Engineer-in-Charge.

iii. Supply of all raw steel materials for fabrication, taking into account wastage margin, including storage and upkeep of the materials.

iv. Furnishing of all materials, labour, tools and plant and all consumable required for fabrication and supply of all necessary bolts, nuts, washers, tie rods and welding electrodes for field connections, with necessary wastage margins.

v. Fabrication of the steel works in accordance with the approved fabrication drawings, including all shop assembling, matching and marking. Design, manufacture / fabrication and provision of all jigs, fixings, manipulators etc. required for the fabrication.

vi. Provision of shop painting and requisite site painting to all fabricated steelwork, as per requirements of the related specification of the painting.

vii. Suitability marking, bundling and packing for transport of all fabricated materials.

viii. Preparing and furnishing detailed bill of materials, drawing office dispatch lists, Bolts Lists and any other lists of bought out items required in connection with the fabrication and erection of the structural steelwork.

ix. Loading and transporting all fabricated steelwork and field connection materials to site.

x. The contractor shall submit, for examination by the Engineer-in-Charge, detailed particulars of his proposed methods of erection of the superstructure steelwork, together with complete calculations relating to strength and deflection. If the erection scheme necessitates the attachment of strength steelwork to the permanent steel work, the contractor shall submit, for approval of the Engineer-in-Charge, the methods he proposes for making good the permanent steelwork after removing the temporary work. The contractor shall also submit the design and fabrication drawings of all temporary support, staging, braces etc. required for safe erection, for approval of the CMRL.

xi. The contractor shall provide all construction and transport equipment, tools, tackle, and consumables, materials, labour and supervision required for the erection of the structural steelwork.

xii. Receiving, unloading, checking and moving to storage yard, storage, guarding and upkeep of fabricated steelwork and other consumable materials and fasteners at site.

xiii. Transportation of all fabricated structural steel materials from site storage yard, handling, assembling, bolting, welding and satisfactory installation of all fabricated structural steel materials in proper location, according to approved erection drawings and/or as directed by the Engineer-in-Charge.

xiv. Setting out, aligning, plumbing, leveling, bolting, welding and securely fixing the fabricated steel structures in accordance with the erection scheme, or as directed by the Engineer-in-Charge.

xv. Providing protective treatment to the erected steel structures, as per Specification.

xvi. All major modifications of the fabricated steel structures, as directed by the Engineer- in-Charge, including but not limited to the following:

a. Removal of bends, kinks, twists etc. for parts damaged during transport and handling.

b. Cutting, chipping, filling, grinding etc. if required or preparation and finishing of site connections.

c. Reaming of holes for use of higher size bolt if required.

d. Re-fabrication of parts damaged beyond repair during transport and handling or re-fabrication of parts which are incorrectly fabricated.

e. Fabrication of parts omitted during fabrications by error, or subsequently found necessary.

f. Drilling of holes which are either not drilled at all or are drilled in incorrect location during fabrication.

g. Carry out tests in accordance with the related Specification.

5.3 Submittals

On commencement of the Project, the Contractor shall submit the following:

a. Prior to the technical submittals, the contractor shall submit the proposed overall schedule for documentation such as calculations, shop/ working drawings, plan/ procedures and records. Submission of samples, process of fabrication / delivery / erection for the approval of the Engineer-in-Charge.

b. Complete fabrication drawings, materials lists, cutting lists, bolt lists, welding schedules and QC schedules, based on the design drawing furnished to him and in accordance with the approved schedule. It is highlighted that structural steel members dimensions indicated in bid drawings are tentative only, and may be modified during final design stage.

c. Results of any tests, as and when conducted and as required by the Engineer-in- Charge.

d. Manufacturers mill test reports in respect of steel materials, bolts, nuts and electrodes, as may be applicable.

e. A detailed list of all constructional Plant & Equipment, such as cranes, derricks, winches, welding sets, erection tools etc. their make, model, present condition and location, available to the contractor and the ones he will employ on the job to maintain the

progress of work in accordance with the contract.

f. The total number of experienced personnel of each category, like fitters, welders, riggers etc., which he intends to deploy on the project.

The contractor shall submit a detailed erection programme for completion of the work in time and in accordance with contract. This will show, in a Performa approved by the Engineer-in-Charge, the target programme, with details of erection proposed to be carried out in each week, details of major equipment required and an assessment of required strength of various categories of workers.

The contractor shall submit complete design calculations for any alternative sections proposed by him, for approval of the Engineer-in-Charge. Use of any alternative section shall be subject to approval of the Engineer-in-Charge. However, no escalation in unit rates of work shall be allowed for such cases.

5.4 Furnishing of Information

A. Design drawings shall be furnished to the contractor and all such drawings shall form part of these Specifications.

B. The Engineer-in-Charge reserves the right to make changes in the design drawings even after release for preparation of shop drawings to reflect addition, omission & modifications in data/ details and requirements. Contractor shall consider such changes as part of these Specifications and the contract, and no extra claims shall be entertained on this account.

C. Design drawings, approved by the Engineer-in-Charge, will show as appropriate the salient dimensions, design loads, sizes of members, location of openings at various levels and other necessary information required for the preparation of fabrication drawings, designs and erection details.

D. It shall be clearly “understood that the drawings of the Engineer-in-Charge are design drawings. The typical detail of connection, cuts, notches, bends, etc. where shown in the design drawings are only for general guidance of the contractor. The _contractor shall design and develop all such details based on the design forces and functional requirements.

E. In case of variations in design drawings and specifications, the decision of the Engineer-in-Charge shall be final. Should the contractor, find any

discrepancy in the information furnished by the Engineer-in-Charge, same shall be immediately brought to the notice of Engineer-in-Charge for resolution. The contractor shall obtain clarifications on discrepancies from CMRL before proceeding with the work.

F. No detailed shop/ fabrication/ erection drawings will be accepted for examination by the Engineer-in-Charge unless the same, have first been completely checked by the contractor's qualified Structural Engineer (independent agency to be appointed by contractor) and are accompanied by an erection plan showing the location of all pieces detailed. The contractor shall check and ensure that detailing of connections is carefully planned to obtain ease in erection of structures, including field-welded connections and/or bolting.

G. No fabrication work shall be started by the contractor without having obtained approval of Engineer-in-Charge on the relevant drawings. Approval by the CMRL of any of the drawings shall not relieve the contractor of his responsibility to provide correct workmanship, fit of parts, details, materials and errors or omissions of all work shown thereon. Drawings, for approval, shall be submitted by the contractor in an orderly manner commensurate with erection sequence and construction programme.

H. The contractor shall furnish five prints of all approved final drawings for field use and record purpose.

I. The drawings prepared by the Contractor, and all subsequent revisions thereof shall be at the cost of the Contractor, and no separate payments shall be made for the same. Revisions shall incorporate all modifications, field changes, substitutions etc. effected. The rates/prices quoted for fabrication work shall be deemed to include the cost of such drawing work.

J. The Contractor shall give due consideration to the need of trial assemblage at shop, weight and size limitation of elements for transportation from shop to construction site, temperature variation of 25 degree centigrade between the fabrication shop and site, site measurements of the as-built dimensions and avoidance of site welding except for fixtures. All the drawings shall be prepared in metric units. The

drawings should preferably be of A-1 standard size, and the details shown therein shall be clear and legible. These drawings shall include but shall not be limited to the following:

i. Assembly drawings, g1vmg exact sizes of the sections to be used and identification marks of the various sections.
ii. Dimensional drawings of base plans, anchorages details in foundation, foundation bolts location etc.
iii. Complete Bills of Materials and detailed drawings of all sections including their billing weights.
iv. Shop details of temporary structures together with detailed calculations.
v. Detailed shop drawings for proper co-ordination with the concrete components to which the steel members shall be connected, as required.
vi. Any other drawings or calculations that may be required for proper completion of the works and clarification of the works or substituted parts thereof.
vii. All 'as-built' drawings.

5.5 Applicable Codes of Practice

The following specifications, standards and codes are included as part of this Specification. All Standards, specifications, codes of practice current on the date of signing of agreement and referred to herein shall be applicable

a. IS: 800 (1984): Code of Practice for General Construction in Steel.
b. IS: 808 (1989): Dimensions for Hot Rolled Steel Beam, Column, Channel and Angle Sections.
c. IS: 814 (1991): Covered Electrodes for Manual Metal Arc Welding of Carbon & Carbon -Manganese Steel.
d. IS: 816 (1969): Code of Practice for Use of Metal Arc Welding for General Construction in Mild Steel.
e. IS: 817 (1969): Code of Practice for Training and Testing of Metal Arc Welders.
f. IS: 919 (1993): ISO System of Limits & Fits (Part 1 & Part 2)
g. IS: 1148 (1982): Hot Rolled Rivet Bars (up to 40mm) for Structural Purposes.

h. IS: 1182 (1983): Recommended Practice for Radio Graphic Examination of Fusion Welded Butt Joints in Steel Plates.
i. IS: 1363 (1992): Hexagon Head Bolts, Screws and Nuts of Product grade C. (Part 1 to Part 3)
j. IS: 1364 (1992): Hexagon Head Bolts, Screws and Nuts of Product Grades A & B (Part 1 to 5)
k. IS: 1367 (1991): Technical Supply Conditions for Threaded Steel Fasteners.
l. IS: 1852 (1985): Rolling & Cutting Tolerances for Hot-Rolled Steel Product.
m. IS: 2016 (1967): Plain Washers.
n. IS: 2062 (2006): Hot Rolled low, medium and high tensile structural steel_
o. IS: 2595 (1978): Code of Practice for Radio Graphic Testing.
p. IS: 3600 (1985): Methods of Testing Fusion Welding Joints (Part 1 to Part 9)
q. IS: 3613 (1974): Acceptance Tests for Wire Flux Combinations for Submerged Arc Welding.
r. IS: 3658 (1981): Code of Practice for Liquid Penetrate Flow, Detection.
s. IS: 3757 (1985): High Strength Structural Bolts.
t. IS: 4000 (1992): High Strength Bolts in Steel Structures-Code of Practice
u. IS: 4353 (1967): Recommendations for Submerged Arc Welding of Mild Steel and Low Alloy Steel.
v. IS: 4943 (1968): Assessment of Butt and Fillet Fusion Welds in Steel Sheet, Plate and Pipe.
w. IS: 5334 (1981): Code of Practice for Magnetic Particle Flow Detection of Welds
x. IS: 5369 (1975): General Requirements for Plain Washers and Lock Washers.
y. IS: 5372 (1975): Taper Washers for Channels
z. IS: 5374 (1975): Taper Washers for I Beams.
aa. IS: 6623 (1985): Specification for High Strength Structural nuts
bb. IS: 6649 (1985): Specifications for hardening and tempering washers for high strength structural nuts
cc. IS: 6755 (1980): Double Coil Helieal Spring Washers.

dd. IS: 7215 (1974): Tolerances for Fabrication of Steel Structure.

ee. IS: 7318 (1974): (Part I) Approval Tests for Welders When Welding Procedure Approval is not required -fusion Welding of Steel.

ff. IS: 8910 (1978): General requirements of Supply of Wieldable Structural Steel.

gg. IS: 9595 (1980): Recommendations for Metal Arc Welding of Carbon & Carbon- Manganese Steels.

hh. IS: 1161 (1998): Code of practice for' Steel Tubes for structural purposes': 1998

5.6 Products

5.6.1 Materials

A. All materials to be supplied by the Contractor shall conform to relevant Indian Standards or equivalent, as approved by the Engineer-in-Charge.

B. Steel materials required for the work shall be free from imperfections, mill scales, slag intrusions, laminations, pitting, rusts etc. that may impair strength, durability and appearance. All materials shall be of tested quality only. Test Certificates in respect of each consignment shall be submitted in triplicate. Whenever the materials are permitted for procurement from identified stocks, a random sample shall be tested at an approved laboratory, as directed by the Engineer-in-Charge.

5.6.2 Structural Steel

Structural steel conforming to conforming to IS: 2062, shall be used for all structures as indicated in the drawings and according to direction of Engineer-in-Charge. Hollow steel sections shall confirm to IS: 4923, IS 1161 or IS358 as applicable.

5.6.3 Bolts and Nuts

For splicing of any structural member wherever required, HSFG bolts and nuts of property class-8.8 conforming to IS 4000, IS: 3757 and IS: 6623 (1985) respectively shall be used. Unless specified otherwise, the bolts shall be hexagonal.

All anchor bolts shall be of property class of 8.8 and nuts shall conform to IS: 1363 (1992), IS: 1364 (1992) and IS:1367, as applicable, and unless specified otherwise, shall be hexagonal. All nuts shall conform to property class compatible with the property class of the bolt used.

5.6.4 Washers

For HSFG bolts, washer shall be conforming to IS: 6649 (1985).

Plain washers shall be conforming to IS: 5369 (1975), unless otherwise specified. One washer shall be supplied with each bolt and, in case of special types of bolts; more than one washer as needed for the purpose shall be supplied. An additional double coil helical spring washer, conforming to IS: 6755 (1980), shall be provided for bolts carrying dynamic or fluctuating loads and those in direct tension. Tapered washers, conforming to IS: 5372 (1975) and IS:5374 (1975), shall be used for channels and beams respectively wherever required.

5.7 Storage of materials

5.7.1 General

All materials shall be so stored as to prevent deterioration, and to ensure the preservation of their quality and fitness for the work. If required by the CMRL, the materials shall be stored under cover and suitably painted for the protection against weather. Any material, which has deteriorated or has been damaged shall be removed from site and replaced by new members, as directed by the Engineer-in-Charge at no extra cost and time.

i. T he steel to be used in fabrication shall be a stored in separate stack clear of the ground section wise and lengthwise.

ii. T he storage area shall be kept clean and properly drained. Structural steel shall be so stored and handled in such a manner that members are not subjected to excessive stresses and damage. Girders and beams shall be placed in upright position. Long members shall be supported on closely spaced skids to avoid unacceptable deflection.

5.7.2 Yard

i. The Contractor shall be required to establish a suitable yard, in an approved location at site for storing the fabricated steel structures and other materials which will be delivered to site. The yard shall have proper facilities such as drainage and lighting including access for cranes, trailers and other heavy equipment's.

b. The Contractor shall have been deemed to have visited the site, prior to

submission of his bid, to acquaint himself with the availability of land and the development necessary by way of filling, drainage, access roads, fences, sheds etc., all of which shall be carried out by the Contractor at his own cost and as directed by the Engineer-in-Charge.

5.7.3 Covered Store

All field connection materials, paints etc. shall be stored on racks and platforms, off the ground in a properly covered building by the contractor.

5.8 Structural Steelwork Specification -Welded Structure

5.8.1 General

The contractor shall submit a method statement for all activity relating to fabrication, trail, erection at workshop and final erection at site after final assembly within 21 days of commencement of work.

The contractor shall identity a proper fabrication workshop facility and intimates the same to the Engineer-in-Charge with full details within fifteen days of commencement of work for approval. The contractor shall have to maintain site workshop facility for full assembly at site including site splicing for complete erection of truss on ground. The—contractor shall have to maintain painting workshop at site for repairs to workshop painting, if any and finial coat of paint over steel trusses.

5.8.2 Products

Ref. Specification on relevant IS Code for structural steel.

5.8.3 Execution

5.8.3.1 Workmanship

5.8.3.1.1 General

All workmanship shall be in accordance with the best practices in modern structural shops. Greatest accuracy shall be maintained in the manufacture of every part of the work and similar parts shall be strictly interchangeable. The contractor shall not proceed with any welding until the Engineer-in-Charge has approved his welding plan, which shall include.

1) -All information's on welding procedures, equipment, additives and preheating during
    a. Welding operation.
2) Details of non-destructive testing methods Precautions with regard to welding shrinkage Possible treatment of completed welds by grinding

procedure and programme of welding sequence

5.8.3.1.2 Templates

Templates used throughout the work shall be of steel in cases where actual materials have been used as templates for drilling similar pieces, the Engineer-in-Charge shall decide whether such materials are fit to be used as parts of the finished structure.

5.8.3.1.3 Straightening

All materials shall be straight and free from twists, and if necessary, before being worked, shall be straightened and/or flattened by pressure, unless required to be of curvilinear form.

5.8.3.1.4 Clearance

The clearance between fraying surface of bolted connections shall not be greater than 1mm at each end. If separation is between 1 to 3mm, the surface should be tapered to eliminate the separation. Over 3mm separation shall be filled with filler plates.

5.8.3.1.5 Shearing, Cutting and Planning

Cutting shall be done automatically. Cutting by shearing machine may be used for plates not exceeding 10 mm in thickness provided that the plate edges be fully enclosed in a weld. Oxygen cutting may be used provided a smooth and regular surface free from cracks and notches is secured.

1. Chipping of angle flanges and edges of plates, wherever necessary, shall be done without damaging the parent metal. Chipped edges shall be ground to a neat finish and sharp corners and hammered rough faces shall be rounded off.
2. The edges and ends of all cut/sheared plates members, flange plates, web plates of plate girders, and all cover plates, and the ends of all angles, tees, channels and other sections forming the flanges of plate girders, shall be planed/ground. Edge preparation for welding may be done by machine controlled flame cutting, with edges free from burrs should be clean and straight.
3. The butting surfaces at all joints of girders shall be planed so as to butt in close contact throughout the finished joint.

5.8.3.1.6 Assembly

All parts assembled for welding shall be in as close contact as practicable over the whole surface.

The component parts shall be so assembled that they are neither twisted nor otherwise damaged. Specified cambers, if any, shall be provided.

All parts of bolted and welded members shall be held firmly in position by means of jigs or clamps while bolting or welding. No drifting of holes shall be permitted, except to draw the parts together and no drift used shall be larger than the nominal diameter of the bolt. Drifting done during assembling shall not distort the metal or enlarge the holes.

Trial assemblies shall be carried out at the fabrication stage to ensure accuracy of workmanship. These checks shall be witnessed by the Engineer-in-Charge and such trial assemblies shall be at the cost of the Contractor.

5.8.3.2 Welding

5.8.3.2.1 General

The welding and the welded work shall conform to IS: 1024-1979, IS: 816 (1969) and 1S:9595 (1980), unless otherwise specified. As much wok as possible shall be welded in shops and the layout and sequence of operations shall be so arranged as to eliminate distortion and shrinkage stresses.

5.8.3.2.2 Electrodes

All electrodes shall be kept under dry conditions. Any electrode damaged by moisture shall not be used unless it is guaranteed by the manufacturer that, when ·it is properly dried, there will be no detrimental effect. Any electrode, which has part of its flux coating broken away or is otherwise damaged, shall be rejected. Any electrode older than six (6) months from the date of manufacture shall not be used. Batch certificates for electrodes shall be submitted by the Contractor.

5.8.3.2.3 Preparation of Joints

1. The edges shall be prepared, with an automatically controlled flame cutting torch, correctly to the shape, size and dimensions of the groove, prescribed in the design and fabrication drawings. In case of U-groove joints, the edges shall be prepared with an automatic false cutting torch in two phases, following a bevel out with a gouging pass, or by machining.
2. The welding surfaces shall be smooth, uniform and free from fins, tears, notches or any other defects, which may adversely affect welding, and shall be free of loose scale, slag, rust, grease, paint, moisture or any other foreign material.

5.8.3.2.4 Welding Procedure

1. All welding procedures shall be submitted to the Engineer-in-Charge for approval, well before starting fabrication.
2. The welding procedures shall be arranged by the Contractor to suit the details of the joints, as indicated in the drawings and the position at which welding has to be carried out. Welding procedure shall cover the following:
   a. Type and size of electrodes
   b. Current and (for automatic welding) arc voltage
   c. Length of run per electrode; or (for automatic welding) speed of travel
   d. Number and arrangement of runs in multirun welds
   e. Position of welding
   f. Preparation and set-up of parts
   g. Welding sequence
   h. Pre or post heating
   i. Any other relevant information.
3. The welding procedures shall be so arranged that distortion and shrinkage stresses are reduced to the minimum, and that the welds meet the requirement of quality specified.
4. Any weld found defective shall be removed, by using either chipping hammer or gouging torch, in such a manner that parent material is not injured in any way.

5.8.3.2.5 Fusion Faces and Surrounding Surfaces

i. Fusion faces and the surrounding surfaces within 50mm of the welds shall be free from all mill scale and free from oil, paint or any substance which might affect the quality of the welds or impede the quality/progress of welding. These shall be free from irregularities, which would interfere with the deposition of the specified size of weld or be the cause of defects.

ii. All mill scale within 50mm of welds shall be removed prior to welding, either by pickling followed by thorough power wire brushing, or by other approved methods.

iii. If preparation or cutting of the fusion faces is necessary, the same shall be carried out by shearing, chipping, gas cutting or flame gouging.

iv. Where hand gas cutting or hand gouging is employed, the blowpipe or gouging blowpipe shall be properly guided.

5.8.3.2.6 Assembly for Welding

Parts to be welded shall be properly assembled and held firmly in position by means of jigs and clamps prior to and during welding.

5.8.3.2.7 Welded Girders and Other Plate Construction

Automatic submerged arc welding shall be employed for fabrication of welded girders and other plate construction, wherever specified. Metal inert gas welding (C02) may be done for short length where access to the location of the weld does not permit submerged arc welding subject to approval of Engineer-in-Charge.

5.8.3.2.8 Accuracy of Fit-Up

Parts to be fillet welded shall be brought into as close contact as practicable, and the gap due to faulty workmanship or incorrect fit-up shall not exceed 1.5nim. If greater separation occurs at any, position, the size of fillet weld shall be increased at such positions by the amount of the gap.

5.8.3.2.9 Jigs and Manipulators

Jigs and manipulators shall be used, where practicable, and shall be designed to facilitate welding and to ensure that all welds are easily accessible to the operators.

5.8.3.2.10 Ends of Butt Welded Joints

The ends of butt joints shall be welded so as to provide full throat thickness. This may be done by the use of extension pieces, cross-runs or other approved means.

5.8.3.2.11 Weld Face and Reinforcement of Butt welds

The weld face shall, at all places, be deposited projecting the surface of the parent metal. Where a flush surface is required, the surplus metal shall be dressed off.

5.8.3.2.12 Testing of Butt Welds

Butt-welded joints are to be 25% radio graphically tested by the Contractor at his own cost. If such tests indicate the joints to be defective, the cost of rectification of defective welds shall also be borne by the contractor.

5.8.3.2.13 Minimum Leg Length & Throat Thickness in Fillet Welds

The minimum leg length of a fillet weld as deposited shall be not less than the specified size. In no case shall a concave weld be deposited, unless specifically permitted. Where permitted, the leg length shall be increased above that specified length, so that the

resultant throat thickness is as great as would have been obtained by the deposition of a flat-faced weld of the specified leg length.

5.8.3.2.14 Dislodging

After making each run of welding, all slag shall be thoroughly removed and the surface cleaned.

5.8.3.2.15 Quality of Welds

The weld metal, as deposited {including tack welds), shall be free from-cracks, slag inclusions, porosity, cavities and other deposition faults The weld metal shall be properly fused with the parent metal without under cutting or overlapping at the toes of the weld. The surface of the weld shall have a uniform consistent contour and regular appearance.

5.8.3.2.16 Weather Conditions

Welding shall not be done under weather conditions, which might adversely affect the efficiency of welding.

5.8.3.2.17 Qualification and Testing of Welders

The Contractor shall satisfy the department that the welders are suitable for the work for which they will be employed, and shall produce evidence to the effect that welders, have satisfactorily completed appropriate tests, as described in IS:817 Part I {1992). The CMRL may, at his own discretion, order periodic tests of the welders and/or of the welds produced by them. Such tests shall be at the expense of the Contractor.

5.8.3.2.18 Supervision

The Contractor shall employ competent welding supervisors to ensure that the standard of workmanship and the quality of the materials comply with the requirements laid down in this Specification.

5.8.3.2.19 Machining of Butts and Bases

Splices and butt joints of compression members, depending on contact for stress transmission, shall be accurately machined over the whole section. In column bases, the ends of shafts together with the attached gussets, angles. Channels, etc., after bolting and/or welding together as the case may be, shall be accurately machined so that the parts connected butt over the entire surface of contact Care shall be taken that connecting angles or channels are fixed with such accuracy that they are not reduced in thickness by machining by more than 0.8mm.

5.8.3.2.20 Requirement of Welded Joints

Apart from the requirements of welding specified under the above sub clauses, sections above, the Contractor shall ensure the following requirements in the welded joints.

i) Strength-quality with parent metal. ii) Absence of defects

iii) Corrosion resistance of the weld shall not be less than that of parent material in an aggressive environment.

5.8.3.3 Shop Assembly

The steelwork shall be temporarily shop assembled, as necessary, so that the accuracy of fit may be checked before dispatch. The parts shall be shop assembled with a sufficient number of parallel drifts to bring and keep the parts in place.

Since parts drilled or punched, with templates having steel bushes shall be similar and, as such, interchangeable, such steelwork may be shop erected in part only, as agreed by the Engineer-in-Charge.

5.8.3.4 Erection Marking

1. Each fabricated member, whether assembled prior to dispatch or not so assembled, shall bear an erection mark, which will help to identify the member and its position in respect of the whole structure, to facilitate re-erection at site.
2. These erection marks shall be suitably incorporated in the shop detail and erection drawings.

5.9 Corrosion protection

Great care shall be taken in view of the corrosive environment of Chennai The protective work on structural steel members shall be done using approved epoxy paint (including surface preparation, application of suitable primer coat) approved by Engineer-in-Charge and as per manufacturer's specifications.

The epoxy paint system to be used shall have excellent gloss and colour retention and high durability as per the details of one of the epoxy paint system given below or any other equivalent or better epoxy paint system:

The Contractor shall submit to Engineer-in-Charge for approval the details of the epoxy paint system proposed by him including the product name with detailed product, application and safety data sheets; product manufacturer, ISO rating of manufacturer, place of manufacture and technical back-up available in India; detailed case histories; performance guarantee offered; name, location and qualifications/experience of proposed coatings

applicator along with guarantee undertakings from both the manufacturer and applicator. Only the approved epoxy paint system shall be used in the works.

The colour shade of the epoxy paint will be finalized by Engineer-in-Charge after assessing certain mock-up areas prepared by the contractor. For this purpose the contractor is, without his receiving any special remuneration, to produce sample areas which will be used to decide the final colour shade.

5.10 Structural Steel Work -Quality Control & Testing Requirements

5.10.1 General

5.10.1.1 Scope of Specification

The scope of work of these specifications is to establish the norms for ensuring the required Quality Control through established testing norms of the welded structural steelwork.

5.10.1.2 Codes / Standards

Relevant IS codes for tolerance and tests of welding procedures as specified in the specification for Structural Steel Work.

5.10.1.3 Submittals

The Contractor shall submit the following:

Proposed overall schedule for documentation of calculations, shop drawings, plan/ procedures and records, submission of procedure of fabrication.

The contractor shall himself inspect all materials, shop work and field work to satisfy the specified tolerance limits and Quality norms before the same are inspected by Engineer- in-Charge or his authorized representative.

5.10.2 Execution

5.10.2.1 Tolerances

The contractor shall through appropriate planning and continuous measurements in the workshop and the erection at site, ensure that the tolerance specified below are strictly adhered to.

5.10.2.1.1 Dimensional & Weight Tolerance

- The dimensional tolerance for rolled shapes shall be in accordance with IS: 1852. The acceptable limits of straightness for rolled or fabricated members as per IS: 7215 are:
- Struts and columns: 1/1000 or 10 mm whichever is smaller where L is the length of finished member.
- A limit for distortion in transverse direction from the true axis of plate and box girder shall not be more than U1000 where L is the length of diagonal of profile. Tolerance in specified camber of members shall be 3mm in 12m length Tolerance in specified lengths shall be as follows:
  - Column finished for contact bearing : ± 1mm
  - Other members (cols.) up to and over 10m: ± 5mm
  - Including 10 m U2000 sub to max of : ± 8mm
  - Other members (beams) up to 12 m : ± 3mm
  - Over 12m U4000 sub max. of : ± 5mm

5.10.2.1.2 End of Members

Beam to beam and beam to column connection - Where the abutting parts are to be joined by butt welds, permissible deviation from the square ness of the end is:

Beam up to 600 mm in depth: 1.5 mm

Beam over 600 mm in depth: 1.5 mm for increase in depth of every 600 mm subjected to max of 3 mm.

Where abutting parts are to be jointed by bolting through cleats or end plates, the connections require closer tolerance, permissible deviation from the squareness of the end is:

Beams upto 600 mm in depth 1mm per 600mm of depth subject to a max of 1.5 mm.

For full bearing, two abutting ends of columns shall first be aligned to within 1 in 1000 of their combined length and then the following conditions shall be met:

a) Over at least 80% of the bearing surface the clearance between the surfaces does not exceed 0.1mm.
b) Over the remainder of the surfaces the clearance between the surfaces does not exceed 0.3 mm.

Where web stiffeners are designed for full bearing- on either the top flange or the bottom flange or both, at least half the stiffener shall be in positive contact with the flange. The remainder of the contact face could have a max. gap of 0.25 mm.

5.10.2.1.3 Depth of Members

Acceptable deviation from the specified overall depth as per 1S:7215 (1974) is

- Up to and including 1OOOmm : 1.0 mm

- Over 1000 mm : 2.0mm

5.10.2.1.4 Web Plates

An acceptable deviation from flatness in girder webs in the length between the stiffeners or in a length equal to the girder depth shall be:

- Up to 500 mm depth : 0.5mm
- Over 500 mm & including 1000 mm : 1.0mm
- Over 1000 mm : 2.0mm

5.10.2.1.5 Flange Plates

A reasonable limit for combined warpage and tilt on the flanges of a built-up member is 1/200 of the total width of flange or 2 mm whichever is smaller measured with respect to centerline of flange.

Lateral deviation between centerline of web plate and centerline of flange plate at contact surfaces measured as the difference o between diagonals of nominal length L shall not be greater than U1000.

5.10.2.1.6 End Milling

Column ends bearing on each other or resting on base plates and compression joints designed for bearing shall be milled true and square to ensure proper bearing and alignment. Base plates shall also have their surfaces milled true and square.

5.10.2.2 Quality Control

In order to exercise proper control of the quality of the welding, Contractor shall enforce methods of control as tabulated below:

Purpose	Control subjects	Methods of control
1	**2**	3
Control of welding materials and basic metal quality	Quality control of electrodes, welding wire, - flux and protective gases	Weldability test to determine the technological properties if materials. Mechanical test of weld metal Metalographical investigations of welds macro-structure and microstructure
Checking of welders qualifications	Checking of quality and Weldability of the basic metal and welded members	Checking of weld metal resistance for inter crystalline corrosion. Study if weld metal solidity by physical control methods

Purpose	Control subjects	Methods of control
Control of welded joint quality	Welding of specimens for quality determination	Mechanical tests, metalographical investigation & checking of welded joints by physical control methods
	Control of assembly accuracy and technological welding process	Checking of assembly quality & centering of welded members Checking of welding equipment conditions. Checking correctness of welding procedure. Visual examination of welds

5.10.2.3 Tests & Testing Procedures

Agency for testing of weld shall be approved by the Engineer-in-Charge prior to testing.

5.10.2.3.1 Visual Examination

The contractor shall conduct visual examination and measurement of the external dimensions of the weld for all joints. Before examining the welded joints, areas close to it on both sides of the weld for a width not less than 20 mm shall be cleaned of slag and other impurities. Examination shall be done by a magnifying glass which has a magnification power of ten (10) and measuring instrument which has an accuracy of it0.1 mm or by weld gauges. Welded joints shall be examined from both sides. The contractor shall examine the following during the visual checks.

a. Correctness and shape of the welded joints
b. Incomplete penetration of weld metal.
c. Influx
d. Burns
e. Unwelded craters
f. Undercuts
g. Cracks in welded spots and heat affected zones
h. Porosity in welds and spot welds
i. Compression in welded joints as a result of electrode impact while carrying out contact welding
j. Displacement of welded element

The contractor shall, document all data as per sound practices.

5.10.2.3.2 Mechanical Test

The Contractor shall carry out various mechanical tests to determine weld ability, metal alloy ability, nature of break, correct size and type of electrodes, degree of pre-heat and post-heat treatment. The type, scope and sample of various mechanical tests shall be

determined in agreement with the purchaser. The number of tests conducted shall depend on the result obtained to satisfy the Engineer-in-Charge that the correct type and size of electrode, degree of pre-heating and post-heating and weld ability of metal are being followed.

5.10.2.3.3 Dye Penetration Test

All welds shall be tested by "Dye Penetration test" as per current practices.

5.10.2.3.4 – Deleted -

5.10.2.3.5 Ultrasonic Test

Ultrasonic test shall be conducted by the contractor to detect gas inclusion (pores), slag inclusion, shallow welds, cracks, lamination and friability etc. Prior to starting of ultrasonic test the welded joint shall be thoroughly cleaned of slag and other material. Surface of the basic metal adjacent to welded joint on both sides shall be mechanically cleaned by the grinder or a metal brush to provide the contact of the whole ultrasonic probe surface with surface of basic metal. The width of the clean surface shall be as directed by the CMRL. The welded joint then shall be covered with a thin coat of transformer oil, turbine or machine oil to ensure acoustic contact. The joints so treated shall be marked and the marks shall be entered into the documentation, subsequent to this, ultrasonic test shall be carried out as directed by the CMRL. At least 25% of fillet / weld shall be tested by ultrasonic testing.

5.11 Structural Steel Specifications -Erection

5.11.1 General

5.11.1.1 Scope of Specification

This Specification covers the delivery to site, storage and erection of structural steelwork at site. This includes plant and equipment requirements, installation of fabricated steel work in position and grouting all complete as per drawings, specifications and other provisions of the Contract.

5.11.1.2 Submittals

A. Ref. Specification for Structural Steelwork -General

B. The contractor shall submit for approval a full description of his proposed erection method including sequence of erection, use of temporary supports, connection details and erection camber diagram and design calculations covering various stages of erection process.

5.11.2 Products

Not applicable

5.11.3 Execution

5.11.3.1 Delivery, Storage & Handling

A. Before the shop assembling is dismantled, all members and sections shall be appropriately marked with paint or grooved with their identification numbers as detailed in shop drawings.

B. The Contractor shall deliver the fabricated structural steel materials to site, with all necessary field connection materials, in such sequence as will permit the most efficient and economical performance of the erection work. As per scheduled programme, the Engineer-in-Charge may, at his discretion prescribe or control the sequence of delivery of materials.

C. Fabricated parts shall be handled and stacked in such a way- that no damage is caused to the components. Measures shall be taken to minimize damage to the ·protective treatment on the steelwork. All work shall be protected from damage in transit. Particular care shall be taken to stiffen free ends, prevent permanent distortion and adequately protect all machined surfaces. All bolts, nuts, washers, screws, small plates and articles generally shall be suitably packed and identified.

5.11.3.2 Plant and Equipment

All erection tools and plant & equipment proposed to be used shall be efficient, dependable and in good working condition, and the suitability and adequacy of such shall be determined by the Engineer-in-Charge. The Contractor shall, in his technical proposal submittal, specify the plant and equipment proposed by him for erection of structural steelwork at Site.

5.11.3.3 Storage

Materials to be stored shall be placed on skids above the ground and shall be kept clean and properly drained.

5.11.3.4 Method and Sequence of Erection

The method and sequence of erection shall have the prior approval of the CMRL. The contractor shall arrange for the most economic method and sequence consistent with the drawings and Specifications and such information as may be furnished to him prior to the execution of the Contract. The erection of steelwork shall be planned so as to ensure safe-working conditions at all times. The Contractor shall be solely responsible for enhancing the safety of his construction activities at Site.

5.11.3.5 Assembly & Erection

A. During erection, the members and sections shall be accurately assembled as shown on the approved shop drawings and any match marks shall be followed. The material shall be carefully handled so that no sections will be bent, broken or otherwise damaged. Hammering which will damage or distort the members shall not be done. Bearing surfaces and surfaces to be in permanent contact shall be cleaned before the members are assembled. Splices and field connections shall have one half of the holes filled with bolts and cylindrical erection pins (half bolts and half pins) before bolting with high-strength bolts. Fitting-up bolts shall be of the same nominal diameter as the high-strength bolts, and cylindrical erection pins shall be 1 mm or larger.

B. The correction of minor misfits involving harmless amounts of reaming, cutting and chipping will be considered a legitimate part of the erection. However, any error in the shop fabrication or deformation resulting from handling and transportation which prevents the proper assembling and fitting up of parts by the moderate use of drift pins or by a moderate amount of reaming and slight chipping or cutting, shall be reported immediately to the Engineer-in-Charge and his approval of the method of correction obtained. The contractor shall be responsible for all misfits, errors and injuries and shall make the necessary corrections and replacements.

C. The straightening of plates, angles, other shapes and built-up members, when permitted by the Engineer-in-Charge, shall be done by methods that will not produce fracture or other damages. Distorted members shall be straightened by mechanical means or, if approved by the Engineer-in-Charge, by the careful planned and supervised application of a limited amount of localized heat, each application subject to the approval of the Engineer-in-Charge.

D. The responsibility in respect of temporary bracing and guys shall rest with the Contractor until the structural steel is located, plumbed, leveled, aligned and grouted within the tolerances permitted under the Specification, and the permanent bracing/framing system has been installed.

E. The temporary guys, braces, false work and cribbing shall not be the property of the department and may be removed by the Contractor, with the approval of the Engineer-in-Charge, without any charge, once the permanent framing system has been installed to the satisfaction of the Engineer-in-Charge and when the temporary bracing, guys etc. can be removed without any potential danger/damage to the erected structure.

5.11.3.6 Setting Out

A. Positioning and leveling of all steelwork, plumbing and placing of every part of the structure, with accuracy, shall be in accordance with the approved drawings and to the satisfaction of the Engineer-in-Charge. The Contractor shall check the positions and levels of the anchor bolts etc. before concreting and ensure that they are properly secured against disturbance during pouring operations. The Contractor shall remain responsible for correct positioning and shall set proper screed bars to maintain proper level. No extra payment shall be made on this account.

B. No permanent field connections by bolting shall be carried out until proper alignment and plumbing guides have been attached.

5.11.3.7 Field Bolting

A. Bolts shall be inserted in such a way that they remain in position under gravity, even before fixing the nut. Bolted parts shall fit solidly together when assembled and shall not be separated by gaskets or any other interposed compressible materials. When assembled all joint surfaces including those adjacent to the washers shall be free of scales. They shall be free of dirt, loose scales, burns and other defects that would prevent solid seating of the parts.

B. Holes for turned bolts to be inserted in the field shall be reamed in the field. All drilling and reaming for turned bolts shall be done only after the parts to be connected are assembled. '"Folerances applicable in the fit of the bolts shall be in accordance with relevant Indian Standard Specifications.

C. All high tensile bolts shall be tightened to provide when all fasteners in the joint are tight, the required minimum bolt tension as per relevant Indian Standard/Specification.

D. The manufacturer and use of high strength friction grip bolts shall comply with the requirements of IS: 3757 (1985).

E. Load indicating bolts or washers may be used, subject to the approval of the Engineer-in-Charge.

5.11.3.8 Holes cutting and Fitting

A. No cutting of sections, flanges, webs, and cleats, rivets, bolts, welds etc. shall be done unless specifically approved and / or instructed by the Engineer-in-Charge.

B. The erector shall not cut, drill or otherwise alter the work of other trades, or his own work to accommodate other trades, unless such work is clearly specified in the Contract, or directed by the Engineer-in-Charge. Wherever such work is specified, the Contractor shall obtain complete information as to size, location and number of alterations, prior to carrying out any work.

5.11.3.9 Inserts and Embedment

Various steel inserts and embedment are required under the contract to be fabricated, positioned and secured firmly into place inside the formwork prior to concrete being poured. There are also requirements of jointing, threading, bolting and welding inserts and embedment of different concrete and structural steel elements in order to establish structural continuity and connection. Great care shall be exercised by the contractor in executing all aspects of the work related to inserts and embedment, including tolerances, so that the final assembly of the concrete elements can meet satisfactorily the continuity and contiguity requirements intended in the structure.

5.11.3.10 Painting after Erection

A. Steelwork coated with rust inhibitor shall not be left exposed for a period exceeding 7 days otherwise; such steelwork shall be re-cleaned and re-coated with such finish until encased in concrete.

B. No steelwork with shop paint shall be left exposed at site for a period exceeding that approved by the Engineer-in-Charge.

C. The surfaces required to remain unpainted at shop, shall be given a protective coating after the structure is erected, leveled, plumbed, aligned in its

final position, and accepted by the Engineer-in-Charge. However, touch up painting, making good any damaged shop painting and completion of any unfinished portion of the shop coat shall be progressively carried out by the Contractor.

D. Painting shall not be done in frost or foggy weather, or when humidity is such as to cause condensation on the surfaces to be painted. Before, commencing painting of steel, which is delivered unpainted, all surfaces to be painted shall be dried and thoroughly cleaned from all loose scale and rust.

E. All field bolts, welds and abrasions· to the shop coat, and surfaces delivered unpainted from fabrication shop, shall receive the full protective treatment as specified in Table defined in painting specifications before delivery to Site.

F. Surfaces, which will be inaccessible after field assembly, shall receive the full-specified protective treatment before assembly. Bolts and fabricated steel members, which are galvanized or otherwise treated, shall not be painted.

G. The contractor shall be responsible for any damage caused to other components of the structure including the substructure. In particular, he shall take all necessary precautions to minimize concrete splash onto completed steelwork or rust staining of concrete due to erected steel work and clean and/or repair all stains and other damages to completed work prior to tests on completion.

5.11.3.11 Final Cleaning up

Upon completion of erection, and before final acceptance of the work by the Engineer-in-Charge, the Contractor shall remove, free of cost, all false work, rubbish and all temporary works, resulting from or in connection with the performance of his work.

5.12 Mode of Measurement:

1. The unit rate shall include procurement of all raw steel materials, all welding, foundation and anchor bolts, bolts, nuts, washer & shear connector including its testing, allowance for all types of wastages, complete fabrication and testing, transportation and erection of fabricated parts and handling all incidental works etc. The price shall also include required surface preparation for application of primers and application of primer, as specified. The preparation of complete detailed fabrication/shop/erection drawings based on the design drawings and all permanent and temporary structures for fabrication/erection shall be considered incidental to work.

2. Providing and removal after completion of work any temporary support, staging braces, strutting, tying or anchor bolts, black bolts, fasteners, welding required to withstand the stresses of erection and carrying of plant and equipment's are to be included in the price.

3. The payment for the steelwork will be for the weight of the steelwork actually erected and used as a permanent works, i.e. plates, rolled sections, shear connections, cleats, and splice plates. For the rolled sections and steel plates, the weight given in relevant IS Code and the actual weight whichever is less shall be adopted for the payment. The weight of welding material shall not be added in weight of members for payment.

4. Dimensions of the steelwork will be taken on site or from the actual shop working drawings as proposed by the contractor based on design drawings furnished by Engineer-in-Charge. For structural sections the weight will be calculated on lengths actually used with no deduction for splay cut or mitred end. Full weight of the HSFG bolts, compatible nuts & washers will be paid for as per Indian Standard Codes weights without any deduction for shanks, etc. No account shall be taken of the weight of weld in calculating the weight of steelwork. No deduction shall be made for openings less than 0.02sqm in area measured in plane for bolt holes. The weight of sheet steel, plate, strips and rolled sections shall be taken from relevant Indian Standards.

5. Providing and Pouring non-shrink grout for grouting of pockets of holding down bolts of columns and under base plates shall be considered incidental to work and shall not be measured and paid separately.

5.13 List of Approved Makes/ Manufactures of Materials

S. No	Material	Brand Name / Manufacturer
A	Structural Steel	SAIL, TATA Steel, RINL, Essar Steel
B	Welding Rods / Electrodes / Wires / Flux	Advani, Esab India, HOVAVER, D&H Welding Electrodes
C	Bolts, Nuts & Washers	GKW, Unbrako Precision Fasteners, Deepak Fasteners, Laxmi Precision Screw.

5.14 Third Party Material Test

The role of Quality Assurance consultant shall be conducting detailed checks of activities of construction from the starting stage to the finishing stage. This would involve collection of samples and arranging testing. The consultant would be reporting to the concerned officer's level of through weekly report and suggesting interaction with various authorities as and when required. A Third Party Agency will check & inspect the Material using at site and Quality of work. Minimum 10% of the QC tests are to be certified from third party.

SCHEDULE-E - -Deleted-

SCHEDULE-F: ALUMINIUM COMPOSITE PANEL WALL CLADDING

1.0 Aluminum Composite Panel Cladding

1.1 Scope of Work

The Contractor shall design, supply, fabricate, deliver, install and guarantee all construction necessary to provide a complete aluminum composite panel cladding, complete with all necessary anchors, hardware and supporting frame work to provide a total installation, fully in conformity with the requirement and intent of the specification herein.

Panel mounting system including anchorage, shirns, furring, fasteners, gaskets and sealants, related flashing adapters and masking (as required) for a complete watertight installation.

Parapet, coping, column covers, soffit, sills, border and filler items as required.

The structural properties shall be read in conjunction with the specification of curtain walling and take same in to account while designing aluminum composite panel as a total installation including sub-frame and supporting frame.

1.2 Submittals

Sample

Two samples of each colour or finish selected 100 X 75 mm size shall be submitted by the Contractor before execution of work.

Shop Drawings

Contractor shall prepare detailed layouts/ schematic drawings for the cladding arrangement on Foot Over Bridge in consultation with Engineer-in-Charge. After approval of layout drawings, detailed shop drawings incorporating all allowances for construction and fabrication tolerances shall be prepared and submitted by Contractor for approval of Engineer-in-Charge. Two copies of manufacturer's Literature for panel material shall also be submitted.

And such review shall not relieve the contractor of any responsibilities as stated herein or any other applicable items herein specified. No work shall be fabricated until the shop drawings and all other related submissions, documentation, certification samples and the mock-up for the work have been reviewed and approved by Engineer-in-Charge.

The shop drawings for the work shall show joinery techniques, provisions for horizontal and vertical expansion, framing and anchor member profiles, identify all materials, fasteners and sealants etc. by product name, relative layout of all adjacent walls, beams, columns and slabs with all dimensions to each other and grid lines dimensions, anchorage details to the FOB structure etc. All components shall be assembled, secured anchored, reinforced, sealed and made weather-tight in a manner not restricting thermal or wind movements of

the cladding system. Where possible, sealants shall be concealed. All fastening into or through aluminum shall be non-magnetic stainless steel. The method of assembly, reinforcing and anchorage of the cladding shall be the contractor's responsibility, who shall design the assembly, reinforcing and anchorage in an acceptable manner.

3 hard copies each (blue prints) plus 2 sets of soft copies on compact disk of all final approved shop drawings shall be submitted for use of Engineer-in-Charge.

Test certificates

The Contractor to submit all the performance test certificated as per the relevant codes. The document shall include but not be limited to appropriate Evaluation Reports and I or test reports supporting the use of the Product.

1.3 Quality Assurance

Field measurements should be taken prior to completion of shop fabrication whenever possible.

Field fabrication may be allowed to ensure proper fit, however, field fabrication shall be kept to an absolute minimum with the majority of the fabrication bring done under controlled shop condition.

Shop drawings shall show the preferred joint details providing a watertight and structurally sound wall panel system that allows no uncontrolled water penetration on the inside of the panel system as determined by ASTME 331.

Contractor shall assume undivided responsibility for all components of the exterior panel system including but not limited to attachment top sub-construction, panel to panel joinery, panel to dissimilar material joinery, joint seal associated with the panel system.

1.4 Design Concept

General Requirements

Aluminum composite panel cladding shall be designed to withstand the Design load based upon IS 875 and shall be based on a watertight system with rear ventilation. Normal to the plane of the wall between supports, deflection of the secured perimeter framing members shall not exceed U175 or 12 mm whichever is less. Normal to the plans of the wall, the maximum panel deflection shall not exceed U60 of the full span. Maximum anchor deflection shall not exceed 1/16". At 1.5 design pressure, permanent deflections of the framing members shall not be exceed U100 of the span length and components shall not experience failure or gross permanent distortion. At connection point framing member to anchors, permanents set shall not exceed 1/16".

12mm wide joint shall be provided between cladding elements to cater for individual panel installation and shall be sealed of with silicon sealant.

The cladding shall be as fabricated and erected as to provide for all expansion and contraction of the components. Any temperature changes due to climate conditions shall not cause harmful bricking, opening of joints, under stress on fastening and anchors, noise of any kind of other defects.

The panel cladding including jointing, fastening, holding, brackets system etc. shall be so constructed to be watertight with provision for rear ventilation. The panel cladding shall be designed and got approved from the manufacturers at his own cost.

1.5 Aluminum Composite Panel

4 mm thick Aluminum Composite panel of approved make and manufacturer shall be used, consisting of a core of 0.5 mm thickness with a mild edge with surface finish of fluorocarbon protective colour coating as approved. Approval shall be based on documentation submitted showing the adequacy of the material.

The panel shall have two sheers of 0.5mm thick aluminum a solid core of extruded thermoplastics material formed in a continuous process with no glues or adhesive between dissimilar materials. The core material shall be free of voids and I or spaces and not contain dissimilar material. The core material shall be free of voids and I or spaces and not contain foamed insulation material. The finish side of the panel shall have a removable film applied, which shall remain on the panel during fabrication and erection to protect the surface from damage.

1.6 Product Performance

Thermal resistance – 0.0103 sq. mm KIW

Heat transmission co-efficient- 554 WI (sq. min. K) Linear expansion – 2.4 mm / m 1100C

1.7 Flatness

The cladding surface shall not have any irregularities such as oil canning, waves, buckles and other imperfections when viewed at any position but not less than at an angle of 15 to the true plane of the panel.

1.8 Roofing

Providing, supplying and installation of Insulated GI sheets, Galvanizing shall be carried out by first pickling the black sheets or by cleaning the cold-rolled coils in the line and then dipping them in a bath of molten zinc at a temperature suitable to produce a complete and uniformly adhesive zinc coating. GI sheet should be as per IS 277- 2003. The recommended thickness for roofing application is 0.63 mm and corresponding recommended grade of coating shall be minimum 275 g/m^2

If agreed to between the manufacturer and the purchaser for thickness 0.18 to 0.28 mm (both inclusive), other coating grades 180 and 120 may be used.

1.9 Accessories

Extrusion formed members, sheer and plate shall conform with ASTM 8209 and the recommendations of the manufacturer.

Panel stiffeners, if required shall be structurally fastened or restrained at the and shall be secured to be the rear face of the composite panel with silicon sealant of approved size and required size and strength to maintain panel flatness. Stiffener material and / or finish shall be composite with the silicon.

Flashing shall be of 0.76mm minimum thickness aluminum sheet painted to match the adjacent curtain wall/panel system where exposed. Provide a lap strap under the flashing at abutted conditions and seal lapped surfaces with a full bed of non-hardening sealant.

Fasteners including concealed screws, nuts, bolts and other items required for connecting aluminum to aluminum shall be of non- magnetic stainless steel.

Rivets used for fastening panel to aluminum sub-frame shall be alloy aluminum large flame head type with stainless steel mandrel.

All fixing anchors, brackets and similar attachment used in the erection shall be of non-magnetic stainless steel.

1.10 Fabrication

All panels shall be fabricated into cassette complete with aluminum sub-frame. For curved panels they shall be formed to the required radius prior to assembly of aluminum profile.

All seams of mitered joins of the sub-frame shall be sealed with an approved sealer.

The finished cassette panel shall be delivered complete with component marking to site for easy identification and assembly.

1.11 Welding

No stud welding onto the cladding panels are permitted.

No welding shall be applied to visible surface to which a surface finish such as anodizing painting coating etc. has previously been applied.

1.12 Installation

Any component parts which are observed to be defective in anyway including warped, bowed, dented, abraded and broken members must not be installed. Members of parts, which have been damaged during installation or thereafter before the time of final acceptance shall be removed and replaced.

No cutting, trimming, welding or brazing of component parts during erection in any manner, which would damage the finish decrease the strength or result in a visual imperfection or a failure shall be executed during erection, component, parts, which are to be altered, shall be returned to the shop fabricator, if necessary replaced with new part.

All component parts shall be installed level, true to line with uniform joints and reveals.

Anchorage of the cladding substructure to the building structural shall be by approved methods in strict accordance to the manufacturer's specification. Supporting brackets shall be so designed as to provide three-dimensional adjustments and accurate location of the wall components.

12mm wide joint shall be provided between cladding elements to cater for individual panel installation and shall be sealed off with silicon sealant of approved quality.

1.13 Water Tightness

No gross leakage shall be observed when subject to test water penetration as described in BS 415 part- 1.

1.14 Technical Properties of Aluminum Composite Panels

All cladding shall be of 4.00mm thick aluminum composite panel comprising of high mineral filled core sandwiched between two skins of aluminum alloy-

a) Mechanical properties : Tensile Strength 130 N/mm^2
: 0.2% proof stress 90 N/mm^2
: Elongation 5.65 10%
: Modules of Elasticity 70.00 N/mm^2

b) Vibration and Noise Damping : Average airborne – Sound Transmission
: Loss R/N 25d3 (DIN4109)

c) Thermal Transmittance : R = 0.014 Sq.m 0 C/W

d) Moment of Inertia : 0.347 cm^4/m

e) Panel Weight : 5.5 kg/Sq.m

f) Finish : PVDF stove lacquered (Fluoro carbon)
: On one side and reverse side in mill finish

g) Color : Color to be selected by Engineer-in-Charge using standard PWDF color chart from manufacturer

SCHEDULE-G: LIFTS

1.0 Specifications for Passenger Lifts

1.1 General Requirements of passenger lifts

The passenger lifts shall be suitable for operation in outdoor environment and shall be of outdoor/ heavy duty type as these are to be installed in the Foot Over Bridge.

1.	Type	13 passenger machine room less lift
2.	Number of lifts required.	2 Nos
3.	Load: Number of persons	13 Passengers
4.	Rated speed	1.25 Meter per second
5.	Travel in meter	6.30 Mtrs (approx.)
6.	Number of floors served	Two
7.	Clear inside size of lift car:	As per manufacturer's specification
8.	Dimension of lift machine room	NA as lifts are MRL
9.	Position of counter weight	At the back/sides
10.	Position of machine	Machine Room less - Gearless
11.	a) Type of control	Microprocessor based AC variable voltage variable frequency. (Lift drive motor and controller shall be suitable for operation with supply voltage variation between+ 10% to -15%)
	b) Type of operation	Microprocessor based Simplex selective collective operation with/ without attendant.
	c) Potential free contacts	Potential free contacts for each floor position and up and down movement of the lift shall be provided in the controller which can be used for the building automation system at later date.
12.	Car entrance door	
	a. Number	One
	b. Cabin Size	1100mm x 2000mm for 884 kg. lift
	c. Type of doors	Power operated, Horizontal sliding - center opening horizontal sliding stainless steel scratch proof (Moon Rock Finish)

d. Car open in front only	Yes
13. Landing Doors	Power operated, Horizontal sliding - center opening horizontal sliding stainless steel scratch proof (Moon Rock Finish)
14 A. Lift Car	
I) Construction design	As per General specification for electrical works (Part- Ill lifts & Escalator) -2003
II) Interior Finish	
i) Panels	The side, rear and facia panel shall scratch proof (moon rock/ honey comb finish) of stainless steel sheet for all lifts
ii) Flooring	Stainless Steel Chequered Plate (minimum 6mm thick) as per manufacturer's standards or any other anti-skid flooring as per approval of Employer
iii) Ceiling	Stainless Steel False ceiling as per the latest standards of the manufacturer & design to be approved at the time of approval of drawing
iv) Lighting	Florescent/ CED Fitting as per standard design
v) Ventilation	Suitable ventilation in the false ceiling
14 B. Door Frame	Stainless Steel - Hairline Finish
(a) Number	One
(b) Size	900mm x 2000 mm
(c) Type of Doors	Power operated, Horizontal sliding- center opening horizontal sliding stainless steel scratch proof (Moon Rock Finish)
14. Type of signal system	a) Digital floor position indicator in the car and at all landings (to be provided above the car/ landing doors)
	b) Travel direction indicator in the car and at all landings (to be provided above the car/landing doors)
	c) Gongs & visual indication on all landings for pre arrival of the car for two or more cars.
	d) Overload warning Audio & Visual indicator, inside the car (lift should not start on overload)

e) Battery operated alarm bell and emergency light.

f) Car operating panel with fade proof luminous buttons in car and with intercom

g) Luminous hall buttons with brail inscriptions at all landings.

h) Fireman's switch at ground floor.

15. Landing Entrance a) Locations of landing all doors on the same side entrance in different floors.

b) Number as per No. of stops

c) Size Standard size as per latest IS

d) Type of doors Power operated, Horizontal sliding- center/ side opening

e) Lift in use/lift out of order sign A suitable box above the lift landing with LED illuminated bilingual (in English & Hindi) sign of "LIFT OUT OF ORDER" coming up simultaneously at all floors.

f) Fire resistant rating of the door shall have not less than one hour.

16. Electric Supply a) Power: - 415 V (-15% to +10%), AC, 3Phase, 50Hz, 4 wire system.

b) Lighting: - 230 V, AC, 50 Hz

c) The entire lift equipment should be suitable for operation at + 10% to - 15% of the rated supply wanted.

17. Is neutral wire available for Yes control circuits

18. Proposed time for completion As per NIT

19. Environmental condition at site of Installation.

	DB	RH	WB
Summer condition:	50.0 Deg.C	20%	25.5 Deg.C
Winter condition:	7.5 Deg.C	70%	4.4 Deg. C
Mansoon Condition:	35.0 Deg.C	60%	8.3 Deg. C

Height above mean sea level 216m

Signature of Bidder **Page 227 of 261**

20.	Storage space provided	NA
21.	Emergency Supply	i) Inverter backup with trickle/ boost charges arrangement for at least 30 minutes with maintenance free batteries for emergency light, alarm bell and inter-com system. ii) A separate maintenance free dry batter)' system should be provided for Automatic Rescue Device (ARD).
22.	Door Close Safety	Full Height Infrared light curtain door safety in addition to a pressure operated switch (mechanical safety switch)
23.	Controller panel	The controller panel shall be of suitable steel gauge having Vermi/ dust proof arrangements with suitable in built ventilation system
24.	Firemen Lift	i) All lifts shall be used as fire lifts. ii) Firemen switch for all the fire lift shall be provided at ground floor to enable the fire service personnel to ground the lift in case of emergency. iii) The work 'fire lift' shall be conspicuously displayed in fluorescent paint on all the fire lifts landing doors at each floor level
25.	Automatic Rescue Device	i) Automatic Rescue Device (ARD) should monitor the normal power supply in the main controller and shall activate rescue operations within ten seconds of normal power supply failure. It should bring the Lift to the nearest floor at a slower speed than the normal run. While proceeding to the nearest floor the Lift will detect the zone and stop. After the Lift has stopped, it automatically opens the doors and parks with door open. After the operation is completed by the ARD the Lift is automatically switched over the normal operations as soon as normal power supply resumes. ii) In case the normal supply resumes during Automatic Rescue Device (ARD) in operation

the Lift will continue to run in ARD mode until it reached the nearest landing and the doors are fully opened. If normal power supply resumes when the Lift is at the landing, it will automatically be switched to normal power operation.

iii) All the lift safeties shall remain active during the ARD at least seven times a day. Provided the duration between usages is at least 30 minutes to operate the ARD at least Seven times a day. Provided to duration between usage is at least 30 minutes.

26. The controller shall have the facility for interfacing (through suitable ports, viz RS-232/ RS-485/ USB/ Ethernet etc.) with a PC based Remote Monitoring system (RMS) already existing at Alandur station control room. The Contractor shall visit Alandur station Control room to study the existing RMS"

27.	Approved Makes	Thyssen Krupp / Otis / Kone/ Schindler/ Johnson / Mitsubishi

1.2 Maintenance Requirements:

1.2.1 Defects Liability Period (DLP):

Preventive maintenance & corrective maintenance of the lifts shall be done and carried out by the Contractor during defect liability period (DLP) for a period of 2 years from the date of taking over, including operations from 6.00AM to 10.00 PM including Sunday & holidays.

1.2.2 Comprehensive Maintenance Services (CMS) – Five years:

Comprehensive maintenance services of the lifts provided under the contract for a period of 5 years is covered under the scope of work and hence shall be deemed to have been included in the quoted amount. Maintenance service shall cover regular examination of the installations by the trained technician of the contractor including necessary adjustments, greasing, oiling, cleaning, replacement of all necessary defective parts, provision all consumables, light lamps, diodes etc. to keep the equipment in excellent operational state. The contractor shall also provide 24 hours emergency operational state. The contractor shall also provide 24 hours emergency repair service to attend the escalator at any time of the day or night including Sundays and holidays.

The reliability, availability and maintainability of equipment/ components shall be judged on the basis of Call out Ratio (COR) i.e. engineer visits to the site for unscheduled maintenance of a lift. During the CMS period also the contractor should endeavor that the COR does not exceed 2.5 per lift per year.

Penalty shall be calculated as under:

Nature of defects:		Deduction will be made as under:
(i)	If Lift is kept out of service for more than 3 hrs and up to 6 hrs	Penalty of INR 10,000 per hour shall be imposed for each such case
(ii)	If Lift is kept out of service for more than 6 hrs	Penalty of INR 60,000 per day shall be imposed for each such case
(iii)	If the visit of engineer for non-scheduled	Penalty of INR 20,000 (Rs. Twenty Thousand Only) shall be imposed for each

	maintenance exceeds 2.5 per lift per year	such visit. The penalty shall be applicable during DLP and AMC period also (if separate contract will be awarded for AMC after completion of 2 years DLP)

1.2.3 Every item of machinery, likely to produce sound owing to vibration or any other causes, must be isolated from structure so as to eliminate any possibility of sound travelling to other parts of the buildings. The set of isolation material required for this purpose shall be deemed to be covered in the scope of work and quoted rate.

1.2.4 Two copies of copy of maintenance manual shall be submitted after installation & commissioning of lifts.

1.2.5 The cost of lifts as quoted by Contractor shall include the shall include the cost of the following civil works:

a. Cutting holes in walls, floor etc. and making good to match the existing surface of walls, floors etc.
b. Supply and fixing necessary bolts, nuts, washers etc. required for execution of work.
c. Hoisting arrangement if required
d. Providing protection like cover barricading· tc. During storing and execution to protect the lifts from dust, water etc.
e. During execution, the contractor shall at all-time keep the working and storage areas free from waste or rubbish.
f. All necessary arrangements for hoisting & installation of lift including scaffolding etc

1.2.6 Testing of Installation after Completion:

On successful completion of the installation / testing shall be carried out to the full satisfaction of Employer. The tests shall be accordance with the relevant BIS/ CPWD or any other relevant specifications. Necessary instruments for tests shall be arranged by the contractor during the test at his own cost.

1.2.7 The Responsibilities of Contractor.

During the defects liability period, the Contractor shall also be responsible for (incidental to work and no separate payment shall be made to Contractor for these):

(i) Carrying out day to day maintenance and cleaning of the lifts as per the Maintenance Schedule submitted.

(ii) Deputing trained supervisory staff to carry out the scheduled maintenance and operation of lifts. The Supervisory staff will visit the site daily, inspect the escalators twice a day & shall be responsible for keeping regular coordination for maintenance/ repair of escalator.

(iii) Maintaining proper conditions of operating control installed inside and outside the Lifts for convenient and safe operation of lifts.

(iv) Replacing the worn out parts of the Lift with genuine spare parts as necessitated and observed during routine inspection or otherwise.

(v) Keeping Employer informed in a prescribed and agreed format at all the time regarding maintenance etc. carried out on the Lift.

(iv) Providing all spares and consumable during the defects liability period.

(vi) Response time of maximum 4 hours shall be maintained for emergency services/ repairs throughout the year.

1.2.8 Lift Signages: Contractor shall provide necessary signages and user instructions on each lift. The cost of these shall be deemed to be covered in the scope of work and quoted rate.

1.2.9 Keeping in view, the required time for ordering, manufacture, inspection, delivery & installation of Lift within the overall contract period, Contractor shall take action for ordering the Lift at the earliest after issue of letter of acceptance. However, before ordering the lifts, Contractor shall submit the relevant details/ make/ model of lifts proposed by him for work to Employer for approval within 15 days and place confirmed order with the manufacturer within 2 days of receiving approval of Employer. Only lifts of make/model approved by Employer shall be used in the works.

Only the Lift approved by Employer shall be procured/ installed for the work.

1.2.10 Traffic Diversion: The Contractor shall ensure that the Traffic Movement during the Construction of the Works is properly diverted, maintained and obstruction to the Traffic Movement is kept to the minimum. The Traffic Diversion with all Cost of Men and Material is to form part of the Turn Key Lump Sum Contract. The Traffic Diversion shall include but not be limited to the following.

- Prepare Traffic Diversion Plan for different Phases of Construction and got approved from the concerned Police Department by the Contractor.
- All Necessary Arrangements required for Diversion of Traffic, Erection of Sign Boards, Cautionary Boards and Illumination, etc.
- Provide Road Markings, Drainage System, and Footpath for the Diversion Roads.
- Provide Skilled Flagmen for Traffic Diversion as per the Requirement of Concerned Department.
- Provide Traffic Barricades with Blinkers, Reflective Tapes, Road Delineators, Traffic Cones, Portable Signages, Reflective Lights and other necessary Traffic Signage as required, as directed by the Concerned Authorities and as per the Specification.
- Provide required Sub Grade and Surface Treatments for the Diversion Roads based on IRC Standards before Traffic Diversion and maintain for the Smooth Flow of Traffic throughout the Construction Period as directed by the Employer.
- After Completion of the Work, the Diversion Roads are to be rehabilitated as per IRC Standards and provided with 40mm Bituminous Concrete irrespective of other Treatments provided earlier during Pre-Construction and Construction Period of the Work.
- It is the responsibility of the Contractor to work out the actual Traffic Diversion Schedule in concurrence with the Requirements of the Concerned Department and execute the same during different phases of Construction.
- Pedestrian Facilities shall be provided for Diverted Roads and the Plan for Pedestrian Facilities shall be got approved from the concerned Police Department by the Contractor.

SCHEDULE-H: PASSENGER ESCALATORS

LIST OF STANDARDS

Standard	Description
EN 115	Safety rules for the construction and installation of Escalators.
EN 10048	Hot rolled narrow steel strip.
EN 10051	Specification for continuously hot-rolled uncoated plate, sheet and strip of non-alloy and alloy steels.
EN 10095	Heat resisting steels and nickel.
EN 50214	Flexible cables for Escalators.
IEC 60364	Electrical installations of buildings.
IEC 60947	Specification for low-voltage switchgear and control gear.
BS 4999	General requirements for rotating electrical machines.
BS 5000 Part 99	Rotating electrical machines of particular types or for particular applications.
BS 56	Specification for guide rails.

General Technical Particulars

SL NO	DESCRIPTION	PARTICULARS
1	STEP WIDTH (MM)	1000 mm
2	HORIZONTAL STEPS	Two
3	SPEED	0.50 M/s
4	MOTOR PROTECTING RATE	IP55
5	LIGHTING VOLTAGE	240 V
6	FREQUENCY	50HZ
7	POWER VOLTAGE	415 V
8	ARRANGEMENT	SINGLE

Signature of Bidder **Page 234 of 261**

SL NO	DESCRIPTION	PARTICULARS
9	MOTOR POWER	11 KW AND ABOVE
10	DEFLECTION OF TRUSS:	1/750*L
11	COLOR OF PAINTED TRUSS:	STANDARD COLOUR
12	TREATMENT OF TRUSS	HOT DIP GALVANIZATION/NORMAL PAINTING
13	HANDRAIL COLOR	BLACK
14	BALUSTRADE	Double side Stainless steel Sandwich panel of SS 304 material with 1.5 mm thick with hairline finish
15	SKIRTING	HAIRLINE STAINLESS STEEL
16	INNER & OUTER DECKING	HAIRLINE STAINLESS STEEL
17	STEP DEMARCATION	YELLOW DEMARCATION
18	STEP	DIE CAST ALUMINIUM
19	PANEL OF LANDING PLATE	ETCHED STAINLESS STEEL
20	COMBS	DIE CAST ALUMINUM
21	BROKEN DRIVE-CHAIN CONTACT	TO BE PROVIDED
22	SKIRTING CONTACT	TO BE PROVIDED
23	BROKEN STEP-CHAIN CONTACT	TO BE PROVIDED
24	STEP SAG CONTACT	TO BE PROVIDED
25	PHASE MONITOR	TO BE PROVIDED
26	ZINC STEEL FLYING WHEEL COVER	TO BE PROVIDED
27	MOTOR OVERLOAD AND OVERHEAT CONTACT	TO BE PROVIDED
28	COMB CONTACT	TO BE PROVIDED
29	ALARM BUZZER	TO BE PROVIDED
30	MOTOR SPEED & ANTI-REVERSAL MONITOR	TO BE PROVIDED

SL NO	DESCRIPTION	PARTICULARS
31	STEP ANTI-STATIC BRUSH	TO BE PROVIDED
32	EMERGENCY STOP BUTTON	TO BE PROVIDED
33	HANDRAIL ANTI-STATIC ROLLER	TO BE PROVIDED
34	SERVICE BRAKE RELEASE CONTACT	TO BE PROVIDED
35	LANDING PLATE SWITCH	TO BE PROVIDED
36	SKIRTING BRUSH	TO BE PROVIDED
37	STEP ANTI-UPTHRUST DEVICE	TO BE PROVIDED
38	LED COMB LIGHTING	TO BE PROVIDED
39	AUTO LUBRICATION SYSTEM	YES (WITH OIL COLLECTOR)
40	OUTSIDE TRUSS CLADDING	HAIRLINE STAINLESS STEEL
41	AUTO-START	3D SENSOR TYPE

STEPS

1.1 STEP DEMARCATION

The surface of the steps shall be horizontal at all positions exposed to passenger. The nominal width of steps shall be 1000 mm unless otherwise specified. Yellow lines of 25 mm width shall be marked on both sides and front of the leading/trailing edges of the steps with durable and wear resistant materials to show demarcation between comb and cleat.

1.2 INTEGRAL DIE-CAST ALUMINIUM STEP TREAD AND RISER

The step treads shall be die-cast aluminum with closely spaced cleats designed to provide a secure foothold, the latter being grooved parallel to the travel of the steps to mesh with the comb teeth at the entrance and exit. Step risers shall also be die-cast aluminum integral with the step treads and shall include vertical cleats designed to pass between the cleats of the tread on the adjacent steps thus providing a combing action with minimum clearances.

1.3 ROLLERS

Each step shall be supported on four rubber or synthetic material tyred ball bearing rollers, grease sealed for life and so mounted that tilting and rocking of steps is prevented whilst ensuring smooth quiet operation in service.

1.4 TRACTION

Traction to the steps shall be by means of two endless roller chains.

1.5 DIMENSIONS OF STEP

The depth of any step in the direction of travel shall not be less than 400 mm. The rise of any such step shall not be more than 240 mm.

1.6 CLEAR HEIGHT ABOVE STEP

The clear height above the steps at all points shall not be less than 2.30 m**.**

1.7 FLAT STEPS

There shall be at least a length of two complete steps i.e. 0.80 m at either end of the escalator travelling horizontally from the comb line.

STEP CHAINS

2.1 STEP CHAIN

The steps shall be driven by at least 2 steel link chains of which at least one shall be located at each side of the step.

2.2 MATERIALS

The step chains shall be made of high tensile steel links with hardened and ground pins, unless otherwise specified.

2.3 QUIET OPERATION

The rollers shall accurately engage with the drive sprockets to ensure smooth and quiet operation.

TRACKS

3.1 CURVED SECTION

All the curved sections of the tracks shall be manufactured in steel or aluminium pressure die-castings.

3.2 STRAIGHT SECTION

The straight sections of the tracks shall be of steel or aluminium extrusions. The tracks forming both running surfaces and guards over the trailing rollers shall essentially be channels or of such formation as to prevent derailing.

LANDING OPENING AND LANDING PLATE

4.1 OPENING

Openings of adequate size in the floor will be provided by the Building Contractor on both upper and lower landings. The Contractor shall indicate on site the exact dimensions of the openings, excavation, drains and ventilation holes required.

4.2 LANDING PLATE

Removable floor landing plates shall be provided by the Contractor over the openings to give access to the mechanism for maintenance purpose. These landing plates shall be of stainless steel or wear resistant aluminium alloy which shall afford a secure foothold. Alternative material will not be accepted without the prior approval of the Employer.

4.3 LANDING GAP

The gap between the balustrade exterior paneling and the wall or obstacle shall not exceed 100 mm.

COMBS

5.1 COMBS

Combs shall be provided at the top and bottom landings and shall be wear resistant aluminium alloy with anti-slip pattern.

5.2 COMB TEETH SECTION

The comb teeth sections shall have fine pitch teeth to allow the cleats of the step tread to pass them with a minimum of clearance. The comb teeth sections shall be made of synthetic resin, metal or equivalent material.

Each such comb teeth sections shall be such that, it is adjustable horizontally and vertically and sections forming the same are readily removable in case of emergency.

The teeth of every comb teeth section shall be so meshed with and set into the slots of the tread surface of the steps of the escalator that the points of such teeth are always below the upper surface of such tread surface.

BALUSTRADING

6.1 BALUSTRADES

Solid balustrades shall be installed on each side of the escalator and shall consist of the following components:-

(1) Skirting

The skirting panels shall be vertical and constructed of smooth hairline finish stainless steel with thickness of not less than 2 mm. Embossed, perforated or roughly textured materials shall not be used.

(2) Balustrade Panel

Balustrade panel shall be of double side Stainless steel Sandwich panel of SS 304 material with 1.5 mm thick with hairline finish. The balustrade shall have sufficient mechanical strength and rigidity.

(3) Balustrade decking

The decking shall be of stainless steel or extruded aluminium, polished and anodized in natural color. The decking is to be situated under the handrail and forms the top cover of the balustrade paneling. Appropriate measure shall be provided to discourage people from sliding along the decking.

(4) Extended newel

The newel including the handrails shall project beyond the root of the comb teeth by at least 0.6 m in longitudinal direction.

6.2 DRESS GUARD

Dress guards of brush bristles type shall be provided along the full length of the lower part of the skirting panels.

Brush bristles type dress guard shall be made of nylon filaments. The nylon filaments shall not support combustion and shall be durable and with flagged ends to give a soft face and be securely held within a pressed steel holder. The assemblies shall be easily removed when replacement is necessary. It shall consist of anodized aluminium carrier which is suitable for the escalator sidewall. The bottom of the carrier shall have chamfer angle to eliminate trapping of feet, trolley wheels and parcels, etc. The carrier shall be fixed onto the skirting panel by secret fixings which are concealed by the filaments but are easily removable.

6.3 EXTERNAL CLADDING

The external cladding of the undersides and sides of the escalator will be of hairline finish stainless steel with thickness of not less than 1.5mm.

6.4 SLIM TYPE ESCALATOR

For escalator with the horizontal distance between the balustrade interior paneling greater than the distance between handrail, the following additional requirement must be met :-

(1) Rated speed shall not exceed 0.5 m/s;

(2) Normal width of the step shall be at least 0.8 m

(3) The distance between projection of the comb intersection line and the point at the newel where the handrails change their direction of the movement shall be at least 1.2 m.

HANDRAILS

7.1 RUBBER HANDRAIL

The handrails shall be constructed of multi-layered canvas with the exposed surface covered with smooth black abrasion resistant rubber which shall be vulcanized into an endless loop.

7.2 SPEED

The handrails shall move in the same direction and substantially at the same speed as the steps. The speed of the handrail is permitted to deviate from the speed of the steps, pallets or belt within the limits of 0% to +2%.

7.3 SAFETY GUARD

Safety guards shall be provided where the handrails enter and leave the escalator newels to prevent pinching of fingers and hands.

7.4 HANDRAIL GUIDE

The handrail guides shall be in specially formed section to allow easy movement of the handrail but properly shaped as to retain the handrail always in its place.

7.5 WIDTH OF HANDRAIL

The width of the handrail shall be between 70 mm and 100 mm.

7.6 HANDRAIL CLEARANCE

The horizontal distance between the outer edge of the handrail and walls, adjacent criss-cross escalators or other obstacles shall under no circumstances be less than 80 mm and shall be maintained to a height of at least 2100mm above the steps, pallets or belt of the escalator/passenger conveyor.

TRUSS

8.1 CONSTRUCTION

The structural steel truss shall be a rigid steel fabricated structure and shall be capable of carrying a full complement of passengers together with mechanism of the escalator, the balustrades and the weight of exterior covering. The supporting structure shall be designed in a way that it can support the dead weight of the escalator plus a passenger weight of 5000N/m². The factor of safety used in the design of structural members of the escalator trusses shall not be less than 5 based on static load.

8.2 STEP CHAIN BREAKING

The entire tracking system shall be so designed that in the unlikely event of a step chain breaking, there shall be no likelihood of the steps lifting out of place.

8.3 MACHINERY SPACE

The upper section of the truss shall contain the drive machine and shall be fitted with a trap door. In cases where several drive machines are placed along the length of an escalator, suitable means of access to the drive machines shall be provided.

LUBRICATION

9.1 LUBRICATION

Effective means for lubricating the bearings and moving parts as required shall be provided with easy access.

9.2 OIL PAN

Oil tight drip pans shall be provided for the entire length of the escalator to contain any waste and lubricants within the truss. Where necessary, the oil tight drip pans shall be removable to give access to both the machinery space and the return station for maintenance.

DRIVING MACHINERY

10.1 INDEPENDENT DRIVING MACHINE

Each escalator shall be driven by at least one machine of its own.

10.2 REDUCTION GEAR

The driving machine shall incorporate a reduction gear system employing worm gear, planetary gear or other proven gear types.

(1) Worm gear system

The driving machine shall incorporate a worm reduction gear with a vertical flange-mounted motor or other proven design. It may be connected by chain or other proven

means to the main drive shaft of the escalator. The worm shaft and worm wheel shall be housed in a substantial cast iron housing which shall also hold the lubricant.

(2) Planetary gear system

The motor, planetary gears and brakes shall be fully enclosed and form a unique, compact no-chain unit. Motor and bearings shall have life-time lubrication.

10.3 MOTOR

The motor shall be integrally mounted, A.C. squirrel cage, three phase induction motor of continuous rating, reversible type with high starting torque and low starting current and specially designed for escalator application.

Other proven motor types may also be used subject to the approval by the Employer.

10.4 SPEED

The rated speed of the escalator shall not be more than 0.75 m/s and 0.5 m/s for an escalator with an angle of inclination not exceeding 30 and 35 from the horizontal respectively.

The rated speed of passenger conveyors shall not exceed 0.75 m/s. However, this rated speed may be increased to 0.9 m/s maximum provided.

10.5 BEARING

The motor shall be fitted with grease lubricated ball bearings.

BRAKING

11.1 ELECTRO-MECHANICAL BRAKE

Each escalator shall be provided with braking that is mechanically applied and electrically held off type of sufficient capacity to efficiently bring the escalator to rest with uniform deceleration when travelling at full contract speed in either direction.

11.2 AUXILIARY BRAKE

Escalators and inclined passenger conveyors shall be equipped with auxiliary brake(s) acting immediately on the non-friction part of the driving system for the steps, pallets or the belt (one single chain is not considered to be a non-friction part), if

(a) The coupling of the operational brake and the driving wheels of the steps, pallets or the belt is not accomplished by shafts, gear wheels, and multiplex chains, two or more single chains.

(b) The operation brake is not an electro-mechanical brake.

(c) They are “Public Service Escalators” as defined in the Code of Practice on the Design and Construction of Lifts and Escalators.

11.3 HANDWINDING:

Provision shall be made for hand winding the escalator in either direction, and shall be suitably marked for "UP" and "DOWN" operation. Crank handles and perforated hand wheels are not permitted. Instructions for hand winding devices in English shall be displayed prominently in the machinery space. If the hand winding device is detachable, it shall not be accessible to unauthorized persons. The hand winding device shall be painted yellow.

11.4 STOPPING DISTANCES:

The stopping distances for unloaded and loaded passenger conveyors shall be between the following values:-

Rated Speed	Stopping distance between
0.50 m/s	min. 0.20 m and max. 1.00 m
0.65 m/s	min. 0.30 m and max. 1.30 m
0.75 m/s	min. 0.35 m and max. 1.50 m
0.90 m/s	min. 0.40 m and max. 1.70 m

For escalators/passenger conveyors with intermediate speeds the stopping distances are to be interpolated.

The stopping distances shall be measured from the time the electric stopping device is actuated.

FOOTLIGHTS AND STEP LIGHTS UNDER LANDINGS

12.1 FOOTLIGHT

Footlights shall be provided on either side of the interior of the skirting at both upper and lower landings and energy efficient LED luminaires shall be used. The intensity of illumination shall be not less than 150 lux for indoor; or shall be not less than 150 lux for outdoor escalators or passenger conveyors at the landings, measured at floor level.

12.2 STEP LIGHTS UNDER LANDINGS

Energy efficient LED luminaires shall be provided underneath landings to illuminate the clearance between steps, steps and skirting, steps and comb, at the horizontal steps portion of the escalator. The color of these lights shall be green.

12.3 REPLACEMENT OF LIGHTING FIXTURES

Facility shall be incorporated for the easy replacement of lamp.

SUPPORT BEAMS

13.1 CONCRETE SUPPORT

Concrete supporting beams will be provided by the Building Contractor at both landings and the intermediate support if required by escalators with a large vertical rise.

13.2 MOUNTING FACILITIES

All other supports and mounting facilities, e.g. R.S.J. beams, mounting brackets, bearing plates, etc. required for the installation of the escalator shall be provided by the Contractor.

SAFETY DEVICES

14.1 SAFETY DEVICE

(1) Emergency stopping devices

Emergency stop devices shall be placed in conspicuous and easily accessible positions at or near to landings of the escalator. For escalators with rise above 12 m, and for passenger conveyors with a length of the tread way of more than 40m, additional emergency stopping devices shall be installed.

(2) Broken step chain device

The broken chain safety device shall be incorporated as part of the tension carriage, and they shall operate if the bottom sprocket moves unduly in either direction in the event of either both step chains breaking or becoming unduly lengthened due to wear of the pins, or tension in either chain dropping below a pre-determined value.

(3) Broken drive chain device

A device shall operate for breakage of the chain between the driving machine and the escalator main drive shaft. Auxiliary brake if provided shall also operate.

(4) Broken step device

If any part of the step is sagging so that meshing of the combs is no longer ensured, switching off shall be operated at a sufficient distance before the comb intersection line to ensure that the step which has sagged does not reach the comb intersection line. The control device can be applied at any point of the step.

(5) Broken handrail device

Broken handrail devices shall be situated inside both balustrades at the lower end of the incline, which shall be actuated if either or both handrails break.

(6) Non-reverse device

A non-reversing device shall be arranged to prevent a travelling escalator to slow unduly or attempts to reverse its direction of travel. The escalator shall be stopped once the device is operated and it shall only be started again by the key operated switch.

14.2 OPERATION OF THE SAFETY DEVICE

The operation of any one of these safety devices shall cause the electrical supply to the driving motor to be disconnected and the electro-mechanical brake to be operated thus bringing the escalator to rest.

CONTROL

15.1 CONTROL STATION

(1) Position

Control station shall be provided at both the upper and lower landing newel, which shall contain an emergency stop switch, two key operated direction switches, an audio alarm switch and if specified a foot light switch. The station shall be so positioned as to enable any person operating any of the Switches to afford a full view of the escalator.

(2) Type of switch

The emergency stop switch shall be push button type with a red button and shall be suitably protected against accidental operation. But the up and down directional starting switch shall be of the key-operated spring off type.

(3) Marking

All control switches shall be provided with clearly engraved markings in English.

15.2 AUTOMATIC OPERATION

Escalators which start automatically by the passing of a user shall start to move before the person walking reaches the comb intersection line. This can, for instance, be accomplished by light-rays or contact mat.

The escalator shall be stopped automatically after a sufficient time (at least the anticipated passenger transfer time plus 10 seconds) the passenger has actuated the automatic starting device.

CONTROLLER

16.1 CONTENT

The controller shall be a self-contained unit containing all the necessary electromagnetic switchgears including a residual current circuit breaker, local control push buttons, D.C. power supply, etc.

16.2 LOCATION

The controller shall be located in the truss at the upper landing, and provision shall be made for easy access for maintenance.

16.3 METAL CABINET

The controller shall be fitted inside a dust proof 1.2 mm thick stainless steel cabinet.

MAINTENANCE FACILITIES AND NOTICES

17.1 MACHINERY SPACE LIGHTING

A permanent light, suitably protected, will be provided in the machinery space by the Electrical Contractor, and which can be switched without passing over or reaching over any part of the machinery.

17.2 SWITCHED SOCKET OUTLET

A 16 amp. 3 pin switched socket outlet will be provided by the Electrical Contractor in each escalator machinery space. The socket outlet will be fitted adjacent to the light switch.

17.3 EMERGENCY STOP SWITCH IN MACHINERY SPACES

A stop switch for the machinery shall be provided in each machinery space where means of access to the space is provided.

The stop switch shall:-

(1) Be of a manually opened and closed type;

(2) Be conspicuously and permanently marked "STOP".

EXCEPTION: A stop switch needs not be provided in a machinery space if the main switch is located therein and close to the machinery.

17.4 NOTICE ON THE ACCESS DOOR

On each access door to the machinery space in upper and lower landing a notice of durable materials with the inscription of message.

17.5 MARKING OF ESCALATOR

At least at one landing, the name of the manufacturer & the manufacturer's serial number shall be indicated, visible from outside.

17.6 NOTICE FOR AUTOMATIC START

In the case of escalators starting automatically, a clearly visible and audible signal system, e.g. road traffic signals, shall be provided indicating to the user whether the escalator is available for use, and its direction of travel.

17.7 NOTICES NEAR ENTRANCES OF ESCALATOR

Whenever possible, these notices shall be given in the form of pictographs. The minimum size of the pictographs shall be 80 x 80 mm.

ALARM BUZZER/BELL

18.1 ALARM BUZZER / BELL PROVIDED BY THE CONTRACTOR

An alarm buzzer / bell shall be supplied and installed in the machinery space which shall be sounded when any emergency safety device operates.

REQUIREMENTS FOR WEATHER-PROOF ESCALATORS

19.1 PROTECTION AGAINST WEATHER

The escalator(s) will be protected by a canopy or other similar structure constructed by the Building Contractor.

19.2 PROTECTION AGAINST CORROSION

(1) Truss and metal work of escalator

The entire truss and metal work of the escalator other than moving parts shall be hot-dipped galvanized or adequately protected against corrosion by Normal paint coating system.

The surface of the completed truss and metal work shall be prepared and treated in accordance with the hot dip galvanizing process or normal paint coating as per International standard for hot-dip galvanizing, BS EN ISO 1461 which specifies a minimum coating thickness to be applied to steel in relation to the steels section thickness as per required specifications and recommendation. All rust and dirt on the surface of the truss and metal work shall be removed by wire brushing and the truss and metal work shall be thoroughly degreased by degreasing solvent prior to applying the process.

All the above-mentioned degreasing and hot dip galvanizing process shall be carried out at the factory and galvanizing of truss and metal work at site is not permitted.

(2) Moving parts

Moving parts of the escalator including step driving chains, sprocket gears, steps, etc. which require greasing or oiling and any metal components which for functional reasons, shall not be painted.

These parts shall be constructed of corrosion resistant materials such as stainless steel or heavily electroplated with corrosion resistant materials such as nickel or chromium. These moving parts shall be adequately lubricated all the time by automatic oilers as specified and suitably protected from water entering into the escalator interior.

All ball or roller bearings such as those installed on the step driving chain, driving mechanism shall be of the sealed type.

19.3 LUBRICATION

Automatic oilers shall be provided for chain lubrication and operated in pre-determined period. Device for separation of oil and water shall be provided if the lubrication system is of re-circulating type.

19.4 DRIVING MACHINE

The driving motor shall have a degree of protection of at least IP 55. Watertight cover shall be provided on all bearings.

19.5 ELECTRICAL WIRINGS AND ACCESSORIES

All exposed wiring terminals, junction boxes, switches, etc. shall have a degree of protection of at least IP 65.

19.6 DRAINAGE

The Contractor shall provide effective drainage facilities for the escalator. A permanent drain point will be provided by the Building Contractor at the bottom of the escalator pit.

An additional drain point at the upper pit of an escalator shall be provided by the Contractor if found practicable so that water can be collected and directed to the nearest drain pit provided by others. An alarm giving a warning of flooding at the lowest escalator pit coupled with a timer to stop the escalator after a preset time shall be provided by the Contractor.

Maintenance requirements:

Defects Liability Period (DLP):

Preventive maintenance & corrective maintenance of the Escalators shall be done and carried out by the Contractor during defect liability period (DLP) for a period of 2 years from the date of taking over, including operations from 6.00AM to 10.00 PM including Sunday & holidays.

Comprehensive Maintenance Services (CMS) – Five years:

Comprehensive maintenance services of the Escalators provided under the contract for a period of 5 years is covered under the scope of work and hence shall be deemed to have been included in the quoted amount. Maintenance service shall cover regular examination of the installations by the trained technician of the contractor including necessary adjustments, greasing, oiling, cleaning, replacement of all necessary defective parts, provision all consumables, light lamps, diodes etc. to keep the equipment in excellent operational state. The contractor shall also provide 24 hours emergency operational state.

The contractor shall also provide 24 hours emergency repair service to attend the escalator at any time of the day or night including Sundays and holidays.

The reliability, availability and maintainability of equipment/ components shall be judged on the basis of Call out Ratio (COR) i.e. engineer visits to the site for unscheduled maintenance of an Escalator. During the AMC period also the contractor should endeavor that the COR does not exceed 2.5 per Escalator per year.

Penalty shall be calculated as under:

Nature of defects:		Deduction will be made as under:
(i)	If escalator is kept out of service for more than 3 hrs and up to 6 hrs	Penalty of INR 10,000 per hour shall be imposed for each such case
(ii)	If escalator is kept out of service for more than 6 hrs.	Penalty of INR 60,000 per day shall be imposed for each such case
(iii)	If the visit of engineer for non-scheduled maintenance exceeds 2.5 per Escalator per year	Penalty of INR 20,000 (Rs. Twenty Thousand Only) shall be imposed for each such visit. The penalty shall be applicable during DLP and AMC period also (if separate contract will be awarded for AMC after completion of 2 years DLP)

Every item of machinery, likely to produce sound owing to vibration or any other causes, must be isolated from structures so as to eliminate any possibility of sound travelling to other parts of the buildings. The set of isolation material required for this purpose shall be deemed to be covered in the scope of work and quoted rate.

The cost of Escalator as quoted by Contractor shall include the cost of the following civil works:

a. Cutting holes in walls, floor etc. and making good to match the existing surface of walls, floors etc.

b. Supply and fixing necessary bolts, nuts, washers etc. required for execution of work.
c. Errection arrangement as required.
d. Providing protection like cover barricading etc. During storing and execution to protect the Escalator from dust, water etc.
e. During execution, the contractor shall at all-time keep the working and storage areas free from waste or rubbish.
f. All necessary arrangements for hoisting & installation of Escalator including scaffolding etc.

TESTING AND COMMISSIONING

20.1 ADJUSTMENTS, PERFORMANCE TESTS AND COMMISSIONING

The Contractor shall commission the installation and carry out complete performance tests for all equipment and systems installed by him, making all necessary adjustments including setting all controls and checking the operation of all protective and safety devices in accordance with the manufacturers' instructions, the requirements of the statutory rules and regulations and to the satisfaction of the Employer. Prior to any tests, the Contractor shall submit detailed procedures and a programme for testing and commissioning to the Employer for approval.

20.2 LABOUR AND MATERIALS

The Contractor shall employ a Registered Lift/Escalator Engineer under the Lifts and Escalators (Safety) Ordinance to undertake examination, testing and commissioning of the complete installation. All labor, materials, tools and instrument necessary for carrying out the work shall be provided by the Contractor. The Building Contractor will provide the necessary electricity supply but the Contractor shall coordinate with and to inform the Building Contractor his requirements.

20.3 TESTING

The tests and examination undertaken by the Registered Lift/Escalator Engineer shall include those specified in the Code of Practice on the Design and Construction of Lifts and Escalators, the Code of Practice for Lift Works and Escalator Works and those recommended by the lift/ escalator/ passenger conveyor manufacturer. The relevant forms/certificates as required by the Lifts and Escalators (Safety) Ordinance shall be signed and submitted by the Registered Lift/Escalator Engineer to the Employer on completion of the escalator.

Test and examination certificates as required, Testing and Commissioning Procedure for Lift, Escalator and Passenger Conveyor Installation shall be submitted together with the relevant statutory forms upon completion of the installation.

Tests which purely demonstrate the performance characteristics of the Escalator shall be performed in the presence of the Employer or his/her Representative at the acceptance of the installation.

MAINTENANCE DURING DLP & CMS:

The Contractor shall, in addition to his obligations under the General Conditions of Contract, furnish maintenance free of charge for the entire installation for the whole Maintenance Period following the certified date of completion of the Contract. The extent of work required to be carried out is as follows:-

Planned maintenance

(1) To be responsible for any repairs necessary to maintain the installation in good and safe working order at all times.

(2) To dispatch competent workers once weekly during normal working hours to maintain each Escalator in accordance with Maintenance Schedule for Escalator.

(3) To supply all lubricants, cleaning materials, rope preservatives etc.

(4) Replace all burnt out lamp with correct rating.

(5) To provide, repair or replace at no additional cost to the Employer such mechanical and electrical parts of the installation necessary for the safe and normal operation of the installation.

Emergency maintenance

(1) To provide a 'call-out' service during and outside normal working hours to carry out emergency maintenance by competent workers.

Statutory examination and testing

(1) To carry out the periodic examination and periodic testing of the safety of equipment as stated in the Lifts and Escalators (Safety) Ordinance and to provide such copies of the test certificates, duly signed by a Registered Lift/Escalator Engineer till Comprehensive Maintenance Services.

(2) Provided always that any renewals or repairs necessitated by reason of negligence or misuse of the equipment by others or by reason of any other cause beyond the Contractor's control with the exception of normal wear and tear, these works shall be carried out by the Contractor, if so required by the Employer, at an additional cost to be negotiated by both parties.

(3) All works under this maintenance provision shall be performed by the Contractor's directly employed competent workers under the supervision of the Contractor.

Testing of Installation after Completion:

On successful completion of the installation / testing shall be carried out to the full satisfaction of Employer. The tests shall be accordance with the relevant BIS/CPWD or any other relevant specifications. Necessary instruments for tests shall be arranged by the contractor during the test at his own cost.

The Responsibilities of Contractor.

During the defects liability period, the Contractor shall also be responsible for (incidental to work and no separate payment shall be made to Contractor for these):

(i) Carrying out day to day maintenance and cleaning of the Escalator as per the Maintenance Schedule submitted.

(ii) Deputing trained supervisory staff to carry out the scheduled maintenance and operation of Escalator. The Supervisory staff will visit the site daily, inspect the escalators twice a day & shall be responsible for keeping regular coordination for maintenance/repair of escalator.

(iii) Maintaining proper conditions of operating control installed inside and outside for convenient and safe operation of Escalator.

(iv) Replacing the worn outparts of the Escalator with genuine spare parts as necessitated and observed during routine inspection or otherwise.

(v) Keeping Employer informed in a prescribed and agreed format at all the time regarding maintenance etc. carried out on the Escalator.

(iv) Providing all spares and consumable during the defects liability period.

(vii) Response time of maximum 4 hours shall be maintained for

emergency services/repairs throughout the year.

Escalator Signages: Contractor shall provide necessary signages and user instructions on each Escalator. The cost of these shall be deemed to be covered in the scope of work and quoted rate.

Keeping in view, the required time for ordering, manufacture, inspection, delivery &installation of Escalator within the overall contract period, Contractor shall take action for ordering the Escalator at the earliest after issue of letter of acceptance. However, before ordering the Escalator, Contractor shall submit the relevant details/make/model of Escalator proposed by him for work to Employer for approval within 15 days and place confirmed order with the manufacturer within 2 days of receiving approval of Employer. Only Escalator of make/model approved by Employer shall be used in the works.

Only the Escalator approved by Employer shall be procured/installed for the work.

Traffic Diversion: The Contractor shall ensure that the Traffic Movement during the Construction of the Works is properly diverted, maintained and obstruction to the Traffic Movement is kept to the minimum. The Traffic Diversion with all Cost of Men and Material is to form part of the Turn Key Lump Sum Contract. The Traffic Diversion shall include but not be limited to the following.

- Prepare Traffic Diversion Plan for different Phases of Construction and got approved from the concerned Police Department by the Contractor.
- All Necessary Arrangements required for Diversion of Traffic, Erection of Sign Boards, Cautionary Boards and Illumination, etc.
- Provide Road Markings, Drainage System, and Footpath for the Diversion Roads.
- Provide Skilled Flagmen for Traffic Diversion as per the Requirement of Concerned Department.
- Provide Traffic Barricades with Blinkers, Reflective Tapes, Road Delineators, Traffic Cones, Portable Signages, Reflective Lights and other necessary Traffic Signage as required, as directed by the Concerned Authorities and as per the Specification.
- Provide required Sub Grade and Surface Treatments for the Diversion Roads based on IRC Standards before Traffic Diversion and maintain for the

Smooth Flow of Traffic throughout the Construction Period as directed by the Employer.

- After Completion of the Work, the Diversion Roads are to be rehabilitated as per IRC Standards and provided with 40mm Bituminous Concrete irrespective of other Treatments provided earlier during Pre-Construction and Construction Period of the Work.
- It is the responsibility of the Contractor to work out the actual Traffic Diversion Schedule in concurrence with the Requirements of the Concerned Department and execute the same during different phases of Construction.
- Pedestrian Facilities shall be provided for Diverted Roads and the Plan for Pedestrian Facilities shall be got approved from the concerned Police Department by the Contractor.

Schedule No.	Description of Job	Frequency
1	(a) Check the clearance between the steps/pallets and the guard to ensure adequate clearance.	Weekly
	(b) Inspect bearings of drums, pulleys and all moving parts and Lubricate.	Weekly
	(c) Clean up the machine room as necessary.	
	(d) Ride in escalator conveyor, observe whether the operation is normal. Check whether there is undue vibration.	Weekly
	(e) Check for correct operation of all safety devices; guard safety devices, handrail inlet safety switches, emergency stop buttons, step/pallets chain safety switches, step/pallets safety switches, step/pallets roller switches driving chain safety switches, comb safety switches, etc.	
2	(a) Check and inspect the main drive system. (b) Check and lubricate the step/pallets rollers.	Weekly
	(c) Check and inspect the handrail to ensure adequate tightness and proper functioning. Clean the inside surface of the handrail.	
	(d) Check and inspect the control box.	
	(e) Check and record the braking efficiency.	Bi-weekly

Schedule No.	Description of Job	Frequency
3	(a) Check and inspect the main drive system.	Monthly
	(b) Check and lubricate the step/pallets rollers.	
	(c) Check and inspect the handrail to ensure adequate tightness and proper functioning. Clean the inside surface of the handrail.	Monthly
4	(a) Remove all steps/pallets and clean the rail.	Bi-yearly
5	(a) Check for correct operation of the current overload and safety switches and non-reversal switches.	Bi-yearly
6	(a) Replace all the lubricating oil.	2-yearly

Signature of Bidder **Page 258 of 261**

Section XI

PRICE BID

BILL OF QUANTITIES

Signature of Bidder **Page 259 of 261**

PRICE BID

PREAMBLE TO BILL OF QUANTITIES

The following preambles shall be read in conjunction with the Bill of Quantities.

The rates / prices quoted in the Bill of Quantities shall include:

1 Rates quoted shall include all the safety precautions like temporary platforms / safety nets / jute or fishing net barricades etc. Rates quoted shall include for debris collections, erection of debris chutes if necessary, dismantling and taking away the debris outside the compound from time to time as directed by Chennai Metro Rail Limited so as to keep the surrounding neat & clean etc. complete, (Contractors shall not be entitled for any payment on this account) during the currency of contract.

2 The rates quoted shall include working at all levels including provision of skip and hoist for carriage of materials & laborers, erection of debris chute and removal of the same after completion of work, required lead and lift involved in movement of men, materials and removal of debris as stated above.

3 The rates shall include completion of items in the Schedule, in all respects, as specified and directed at various pages of the tender.

4 All samples of materials shall be submitted well before commencement of the particular item of work and got the same approved from the Chennai Metro Rail Limited. Approved samples shall be retained and made available in the site office as a when required.

5 Some/ minor details of works which are required for entire completion of the items of works described herein in these documents but are not explicitly mentioned but are required to be provided and executed by the contractor and the cost of the said such items is deemed to be included in the respective items. No extra claim on this account shall be admitted.

6 The dismantling work shall be carried out very carefully. Cutting machines shall be used on advice of the Chennai Metro Rail Limited. No payment will be paid for extra thickness of plaster even if required / done to finish the plaster in line, level and to match with the surroundings.

7 The portion of bridge component wherein dismantling is being taken up shall be covered with gunny kantan / and the like and area shall be protected with barricade and necessary boards to be displayed without any extra cost to the Chennai Metro Rail Limited. This shall be as per local byelaws / IS stipulation.

8 Water: The contractors shall make his own arrangement for water supply at his own cost and the Chennai Metro Rail Limited shall not entertain any claim on this account.

9 The rates quoted in the items shall include for work at all heights and locations, unless otherwise mentioned.

10 The Contractor shall provide proper access for the inspection of works during execution.

11 The Contractor shall provide their laborers with safety equipment like safety helmets, shoes, goggles, mask, safety belt while carrying out the work at site. The Contractor shall also provide & erect the safety nets and barricade around the structure. These shall be as per the standard practice followed in the industry.

12 The Contractor shall keep the site and approach area neat & clean and hindrance-free during the currency of contract.

13 The general lighting at ground level shall be arranged by the Contractor at their cost.

14 The price/rates to be quoted only in Schedule-A below.

15 The price/rates shall NOT be quoted in Schedule-B.

Signature of Bidder **Page 261 of 261**

PRICE BID
Schedule - A

MEMORANDUM SHOWING THE ITEMS OF THE WORK TO BE EXECUTED

Item no.	Description of Work	Unit	Estimated Quantity	Rate	Rates to be quoted by the Contractor Both		Amount
					In Figures	In words	
Part A -Civil							
1	Earth work in excavation by mechanical means (Hydraulic excavator) / manual means in foundation trenches or drains (not exceeding 1.5 m in width or 10 sqm on plan), including dressing of sides and ramming of bottoms, lift upto 1.5 m, including getting out the excavated soil and disposal of surplus excavated soil as directed, within a lead of 50 m. DSR No.2.8 (DSR-16, Central Public Work Department)	Cum	435.36				
2	Excess of soil is Carrried by Mechanical transport upto 5km SoR DSR Code No.2242 (DSR-16, Central Public Work Department)	Cum	126.10				
3	Providing and laying in position ready mixed plain cement concrete, mix 1:4:8 with cement content as per approved design mix and manufactured in fully automatic batching plant and transported to site of work in transit mixer for all leads, having continuous agitated mixer, manufactured as per mix design of specified grade for plain cement concrete work, including pumping of R.M.C. from transit mixer to site of laying and curing, excluding the cost of centering, shuttering and finishing, including cost of curing, admixtures in recommended proportions as per IS : 9103 to accelerate/ retard setting of concrete, improve workability without impairing strength and durability as per direction of the Engineer - in - charge. DSR No.4.20.1 (DSR-16, Central Public Work Department)	Cum	43.12				
4	Providing and laying flamed finish Granite stone flooring in required design and patterns, in linear as well as curvilinear portions of the building all complete as per the architectural drawings with 18 mm thick stone slab over 20 mm (average) thick base of cement mortar 1:4 (1 cement : 4 coarse sand) laid and jointed with cement slurry and pointing with white cement slurry admixed with pigment of matching shade including rubbing, curing and polishing etc. all complete as specified and as directed by the Engineerin- Charge : a. Flamed finish granite stone slab Jet Black, Cherry Red, Elite Brown, Cat Eye or equivalent. DSR No.8.12 (DSR-16, Central Public Work Department)	Sqm	10.37				
5	Supplying and filling in plinth with river sand under floors, including watering, ramming, consolidating and dressing complete. DSR No.2.27 (DSR-16, Central Public Work Department)	Cum	1.13				

Signature of the Bidder

PRICE BID
Schedule - A

MEMORANDUM SHOWING THE ITEMS OF THE WORK TO BE EXECUTED

Item no.	Description of Work	Unit	Estimated Quantity	Rate	Rates to be quoted by the Contractor Both		Amount
					In Figures	In words	
6	Providing and laying in position ready mixed M-25 grade concrete for reinforced cement concrete work, using cement content in concrete shall not be less than 400 kg/ cum for RCC work as per approved design mix, manufactured in fully automatic batching plant and transported to site of work in transit mixer for all leads, having continuous agitated mixer, manufactured as per mix design of specified grade for reinforced cement concrete work, including pumping of R.M.C. from transit mixer to site of laying , excluding the cost of centering, shuttering and reinforcement, including cost of admixtures in recommended proportions as per IS : 9103 to accelerate/ retard setting of concrete, improve workability without impairing strength and durability as per direction of the Engineer - in - charge. Cement content considered in this item is @ 330 kg/cum All works upto plinth level. DSR No.5.37.1 (DSR-16, Central Public Work Department)	Cum	133.68				
7	Fixing Centering and shuttering including strutting, propping etc. and removal of form work for Foundations, footings, bases for columns s as per DSR No.4.3.1 (DSR-16, Central Public Work Department)	Sqm	343.28				
8	Brick work with common burnt clay F.P.S. (non modular) bricks of class designation 7.5 in superstructure in all shapes and sizes in : Cement mortar 1:6 (1 cement : 6 coarse sand) DSR No.6.4.2 (DSR-16, Central Public Work Department)	Cum	39.30				
9	Smooth finishing of the exposed surface of R.C.C. work with 6 mm thick cement mortar 1:3 (1 Cement : 3 fine sand). DSR No.5.23 (DSR-16, Central Public Work Department)	Sqm	502.34				
10	Steel reinforcement for R.C.C. work including straightening, cutting, bending, placing in position and binding all complete Hard drawn steel wire fabric DSR No.5.22.5 (DSR-16, Central Public Work Department)	Kg	8937.06				
11	Steel work in built up tubular (round, square or rectangular hollow tubes etc.) trusses etc., including cutting, hoisting, fixing in position and applying a priming coat of approved steel primer, including welding and bolted with special shaped washers etc. complete DSR No.10.16.3 (DSR-16, Central Public Work Department)	Kg	160578.56				

Signature of the Bidder

PRICE BID
Schedule - A

MEMORANDUM SHOWING THE ITEMS OF THE WORK TO BE EXECUTED

Item no.	Description of Work	Unit	Estimated Quantity	Rate	Rates to be quoted by the Contractor Both		Amount
					In Figures	In words	
12	Stainless Steel Handrail 900mm high Providing and fixing stainless steel handrail 900mm high (as shownin drawing) made out of stainless steel conforming to SS 304 with 8% to 8.5% nickel using 50.8mm outer dia at top (with 1.6mm wall thickness) and 38.10mm(1.6mm wall thickness) stainless steel pipe placed vertically at 1m centre to centre and two horizontal SS pipe 25.40mm outer dia (with 1.2mm wall thickness) welded at a distance of 300mm using TIG welding process with 308L SS electrode (in station building all flooor staircases) with necessary bends, flanges and base plates. Rate is inclusive of all materials, labours, lead, lift,etc. as directed by Engineer in-charge.SoR No. BD14-896 (SoR-14-15, Coporation of Chennai Buildings Department)	M	242.22				
13	Providing corrugated G.I. sheet roofing including vertical / curved surface fixed with polymer coated J or L hooks, bolts and nuts 8mm diameter with bitumen and G.I. limpet washers or with G.I. limpet washers filled with white lead, including a coat of approved steel primer and two coats of approved paint on overlapping of sheets complete (up to any pitch in horizontal/ vertical or curved surfaces), excluding the cost of purlins, rafters and trusses and including cutting to size and shape wherever required DSR No.-12.1 (DSR-16, Central Public Work Department)	Sqm	906.69				
14	Designing, Fabrication, testing, Instalation and fixing the position Curtain wall with Aluminum Composite pannel Cladding, with open groves for linear as well as curvilinear portions of the building, for all heights and all levells etc. including: the fastening brackets of Aluminium alloy 6005 T5/ MS with Hot Dip Galvanised with serrations and serrated washers to arrest the Wind load Movement, fasterns, ss316 pins anchour Bolts of apporvied of ss316, Nylon Seprators to prevent the by metallic contacts all complete required to perform as per specification and drawing the item include all cost include material and labour component, the cost of all samples of the individual components testing in the approved labourty. the Contractor shall provide curtain wall with alluminum composite cladding, having all perform characteristics all complete, as per Archetectural Drawing, as per item Described, as specification as per approved shop Drawing and as directed Enggineer in Charge DSR No.-25.7 (DSR-16, Central Public Work Department)	Sqm	479.43				

Signature of the Bidder

PRICE BID
Schedule - A

MEMORANDUM SHOWING THE ITEMS OF THE WORK TO BE EXECUTED

Item no.	Description of Work	Unit	Estimated Quantity	Rate	Rates to be quoted by the Contractor Both		Amount
					In Figures	In words	
15	"Providing corrugated G.S. sheet roofing including vertical / curved surface fixed with polymer coated J or L hooks, bolts and nuts 8 mm diameter with bitumen and G.I. limpet washers or with G.I. limpet washers filled with white lead, including a coat of approved steel primer and two coats of approved paint on overlapping of sheets complete (up to any pitch in horizontal/ vertical or curved surfaces), excluding the cost of purlins, rafters and trusses and including cutting to size and shape wherever required.(1.00 mm thick with zinc coating not less than 275 gm/m²)"	Sqm	330.70				
16	Factory made EPS Core wall pannel/ roof pannel Sandwiched between two engineered welded wire fabric Mesh of 6mm dia Gi wire mesh, with 50mm pitch in both of the directions, kepth at 120-135mm gap and interconnected by the zig zag G.I. wire of 6mm dia of alternete row by welding. DSR No.-8013 (DSR-16, Central Public Work Department)	Sqm	342.70				
17	Providing & fixing in position MS chequered plates non slip type of required size and 5 mm thickness, cut & stiffened in floors, platform, floors as per drawing inclusive of all clamps, angles, bolts, washers, welding, lead, lift, two coats of zinc chromate primer etc. complete as per drawings & specifications.	Kg	20500.00				
18	Painting Steel work with Deluxe Multi Surface Paint to give an even shade. Two or more coat applied @ 0.90 ltr/ 10 sqm over an under coat of primer applied @ 0.80 ltr/ 10 sqm of approved brand and manufacture. DSR No.- 13.48.3 (DSR-16, Central Public Work Department)	Sqm	1704.66				
19	Providing and fixing Chlorinated Polyvinyl Chloride (CPVC) pipes, having thermal stability for hot & cold water supply including all CPVC plain & brass threaded fittings This includes jointing of pipes & fittings with one step CPVC solvent cement, trenching, refilling & testing of joints complete as per direction of Engineer in Charge. 40 mm nominal outer dia Pipes. DSR No.- 18.9.5 (DSR-16, Central Public Work Department)	M	22.50				
Part B - LIFT & ESCALATORS							
20	Supply, Installation, Testing and Commissioning of Passenger Escalators for 6.25 Meters height with the width and other dimensions as shown in the drawing (SLIMLINE - COMMERCIAL ESCALATOR)	Nos	4.00				
21	Supply, Installation, Testing and Commissioning of 13 people capacity elevators for 6.00 Meters height with the width and other dimensions as shown in the drawing	Nos	2.00				
Part C - ROAD / PAVEMENT WORKS							

Signature of the Bidder

PRICE BID
Schedule - A

MEMORANDUM SHOWING THE ITEMS OF THE WORK TO BE EXECUTED

Item no.	Description of Work	Unit	Estimated Quantity	Rate	Rates to be quoted by the Contractor Both		Amount
					In Figures	In words	
22	Taking out existing kerb stones of all types from footpath/ central verge, including removal of mortar etc., including disposal of unserviceable material to the dumping ground, and stacking of serviceable material within 50 metre lead as per direction of Engineerin- Charge. DSR No.- 16.82 (DSR-16, Central Public Work Department)	M	250.00				
23	Removing CC Slab, clearing away and stacking the same for reuse. SR NO 676 (A) (SoR-14-15, Coporation of Chennai Buildings Department)	10Sqm	43.61				
24	Laying at or near ground level kerb stones of all types in position to the required line, level and curvature, jointed with cement mortar 1:3 (1 cement : 3 coarse sand), including making joints with or without grooves (thickness of joints, except at sharp curve, shall not be more than 5 mm), including making drainage opening wherever required etc. complete as per direction of Engineer-in-charge. (Length of finished kerb edging shall be measured for payment). . DSR No.- 16.85 (DSR-16, Central Public Work Department)	M	125.00				
25	Providing and laying at or near ground level factory made kerb stone of M-25 grade cement concrete in position to the required line, level and curvature, jointed with cement mortar 1:3 (1 cement: 3 coarse sand), including making joints with or without grooves (thickness of joints except at sharp curve shall not to more than 5mm), including making drainage opening wherever required complete etc. as per direction of Engineer-in-charge (length of finished kerb edging shall be measured for payment). (Precast C.C. kerb stone shall be approved by Engineer-in-charge).. DSR No.- 16.69 (DSR-16, Central Public Work Department)	Cum	6.07				
26	Taking out existing CC interlocking paver blocks from footpath/ central verge, including removal of rubbish etc., including disposal of unserviceable material to the dumping ground, and stacking of serviceable material within 50 metre lead as per direction of Engineer-in-Charge. DSR No.-16.69 (DSR-16, Central Public Work Department)	Sqm	100.00				
27	Earth work excavating and depositing on bank with initial lead of 10 mts and initial lift of 2 mts. In hard stiff clay, stiff black hard earth, shales muram, gravel stoney earth and earth mixed with small size boulders and hard gravelly soil (SS 20 A) SR NO 61 (SoR-14-15, Coporation of Chennai Buildings Department)	Cum	181.99				

Signature of the Bidder

PRICE BID
Schedule - A

MEMORANDUM SHOWING THE ITEMS OF THE WORK TO BE EXECUTED

Item no.	Description of Work	Unit	Estimated Quantity	Rate	Rates to be quoted by the Contractor Both		Amount
					In Figures	In words	
28	Supplying and filling in with Good Earth for formation of traffic island, median strips, footpath etc., including watering and consolidation by hand roller etc., complete SR NO 279 (SoR-14-15, Coporation of Chennai Buildings Department	Cum	318.13				
29	Planting permanent hedges including digging of trenches, 60 cm wide and 45 cm deep, refilling the excavated earth mixed with farmyard manure, supplied at the rate of 4.65 cum per 100 metres and supplying and planting hedge plants at 30 cm apart complete as per specifications.(market rate)	M	100.00				
30	Providing and laying gang saw cut 18 mm thick, mirror polished pre moulded and pre polished machine cut granite stone of required size and shape of approved shade, colour and texture in footpath, flooring cut granite stone of required size and shape of approved shade, colour and texture in footpath,flooring in road side plazas and similar locations, laid over 20mm thick base of cement mortar 1:4 (1cement : 4 coarse sand) including grouting the joints with white cement mixed with matching pigment, epoxy touch ups etc. complete as per direction of Engineer-in-Charge.DSR No.-16.86.1 (DSR-16, Central Public Work Department)	Sqm	909.96				
31	Providing and fixing stainless steel handrail 900mm high (as shownin drawing) made out of stainless steel conforming to SS 304 with 8% to 8.5% nickel using 50.8mm outer dia at top (with 1.6mm wall thickness) and 38.10mm (1.6mm wall thickness) stainless steel pipe placed vertically at 1m centre to centre and two horizontal SS pipe 25.40mm outer dia (with 1.2mm wall thickness) welded at a distance of 300mm using TIG welding process with 308L SS electrode (in station building all flooor staircases) with necessary bends, flanges and base plates. materials, labours, lead, lift,etc. as directed by Engineer in-charge.SoR No. BD14-896 (SoR-14-15, Coporation of Chennai Buildings Department)	M	250.00				

Signature of the Bidder

PRICE BID
Schedule - A

MEMORANDUM SHOWING THE ITEMS OF THE WORK TO BE EXECUTED

Item no.	Description of Work	Unit	Estimated Quantity	Rate	Rates to be quoted by the Contractor Both		Amount
					In Figures	In words	
32	Manufacturing, supplying and fixing retro reflective sign boards made up of 2 mm thick aluminium sheet, face to be fully covered with high intensity encapsulated type heat activated retro reflective sheeting conforming to type - IV of ASTM-D 4956-01 in blue and silver white or other colour combination including subject matter, message (bi-lingual), symbols and borders etc. as per IRC ; 67:2001, pasted on substrate by an adhesive backing which shall be activated by applying heat and pressure conforming to class -2 of ASTM-D-4956-01 and fixing the same with suitable sized aluminium alloy rivets @ 20 cm c/c to back support frame of M.S. angle iron of size 25x25x3 mm along with theft resistant measures, mounted and fixed with 2 Nos. M.S. angles of size 35x35x5 mm to a vertical post made up to M.S. Tee section ISMT 50x50x6 mm welded with base plate of size 100x100x5 mm at the bottom end and including making holes in pipes, angles flats, providing & fixing M.S. message plate of required size, steel work to be painted with two or more coats of synthetic enamel paint of required shade and of approved brand & manufacture over priming coat of zinc chromate yellow primer (vertical MS-Tee support to be painted in black and white colours).Backside of aluminium sheet to be painted with two or more coats of epoxy paint over and including appropriate priming coat including all leads and lifts etc. complete as per drawing , specification and direction of Engineer—in-charge. DSR No.-16.59.1 (DSR-16, Central Public Work Department)	Each	8.00				
33	Providing and erecting 2.00 metre high temporary barricading at site as per drawing/ direction of Engineer-in-Charge which includes writing and painting, arrangement for traffic diversion such as traffic signals during construction at site for day and night, glow lamps, reflective signs, marking, flags, caution tape as directed by the Engineer-in- Charge. The barricading provided shall be retained in position at site continuously i/c shifting of barricading from one location to another location as many times as required during the execution of the entire work till its completion. Rate include its maintenance for damages, painting, all incidentals, labour materials, equipments and works required to execute the job. The barricading shall not be removed without prior approval of Engineer-in-Charge. (Note :- One time payment shall be made for providing barricading from start of work till completion of work i/c shifting. The barricading provided shall remain to be the property of the contractor on completion of the work). DSR No.-16.81 (DSR-16, Central Public Work Department)	M	300.00				

Signature of the Bidder

PRICE BID
Schedule - A

MEMORANDUM SHOWING THE ITEMS OF THE WORK TO BE EXECUTED

Item no.	Description of Work	Unit	Estimated Quantity	Rate	Rates to be quoted by the Contractor Both		Amount
					In Figures	In words	
34	Earth work in excavation by mechanical means (Hydraulic excavator) / manual means in foundation trenches or drains (not exceeding 1.5 m in width or 10 sqm on plan), including dressing of sides and ramming of bottoms, lift upto 1.5 m, including getting out the excavated soil and disposal of surplus excavated soil as directed, within a lead of 50 m. DSR No.2.8 & 2.12 (DSR-16, Central Public Work Department)	Cum	35.10				
35	Providing and laying in position ready mixed plain cement concrete, with cement content as per approved design mix and manufactured in fully automatic batching plant and transported to site of work in transit mixer for all leads, having continuous agitated mixer, manufactured as per mix design of specified grade for plain cement concrete work, including pumping of R.M.C. from transit mixer to site of laying and curing, excluding the cost of centering, shuttering and including cost of curing, admixtures in recommended proportions as per IS : 9103 to accelerate/ retard setting of concrete, improve workability without impairing strength and durability as per direction of the Engineer - in - charge. DSR No.4.20.1 (DSR-16, Central Public Work Department)	Cum	2.70				
36	KSRRB M800-22.Reinforced Cement Concrete Crash Barrier Provision of an Reinforced cement concrete crash barrier at the edges of the road, approaches to bridge structures and medians, constructed with M-20 grade concrete with HYSD reinforcement conforming to IRC:21 and dowel bars 25 mm dia, 450 mm long at expansion joints filled with pre-moulded asphalt filler board, keyed to the structure on which it is built and installed as per design given in the enclosure to MOST circular No. RW 1 NH - 33022/1/94-00 III dated 24 June 1994 as per dimensions in the approved drawing and at locations directed by the Engineer, all as specified complete as per specifications. MORTH Specification No. B09	Rmtr	10.00				
Part D - MEP WORKS							

Signature of the Bidder

PRICE BID
Schedule - A

MEMORANDUM SHOWING THE ITEMS OF THE WORK TO BE EXECUTED

Item no.	Description of Work	Unit	Estimated Quantity	Rate	Rates to be quoted by the Contractor Both		Amount
					In Figures	In words	
37	Supply, Installation, Testing and Commissioning of LT Panel, Floor mounting type, Top/Bottom entry-'Enclosure: Compartmentalized Single front CRCA-'Doors: 2mm Body: 2mm Gland: 3mm covers and partitions: 1.6mm-'IP class: IP65 weather proof enclosure for outdoor-'Bus bars: Electrolytic grade conductivity as per BIS 5082-'Bus bar Material: As per SLD-'Bus bar supports: DMC/FRP/SMC-Bus bar joints: Shrouded/Tinned -Protection releases: As per SLD (with Adjustable over current & short circuit unless otherwise specified)-Ics=Icu for all breakers-Utilization category: All MCCB shall be Cat: A Type,and Ratings of MCCB Provided shall be as per below mentioned MCCB Ratings. Louvers : Busbar chamber shall have louvers with fine mesh inside-Shade: Epoxy powder coated RAL 7032-'Design: Modular type-Cable entry: As per site condition-Bus bar insulation: Aluminum bus bars shall be bare with color coding /Copper shall be bare with color coding/For Humidified areas the copper bus bars shall be coated with tin. -Note: 1. The Panel shall be complies to the requirement of Electrical Inspectorate/ EB authorities, 2. All MCCB Cubicle shall have LED 'ON / OFF / TRIP' indications without fail., 3. CTs shall be with dual ratio and cast resin type only. 4. All doors to have double rubber gasket with shutter assembly & door seating frame. 5. FRLS /PVC copper wires/cables shall be used	Each	1				
38	Providing and fixing following rating and breaking capacity and 4 pole MCCB with thermomagnetic release and terminal spreaders in above panel board including drilling holes in cubicle panel, making connections, etc. as required., 250 A, 36kA, FPMCCB.415V.	Each	1				
39	Providing and fixing following rating and breaking capacity and 4 pole MCCB with thermomagnetic release and terminal spreaders in above panel board including drilling holes in cubicle panel, making connections, etc. as required., Rating: 160 A, 36kA, FPMCCB, 415V.	Each	1				
40	Providing and fixing following rating and breaking capacity and 4 pole MCCB with thermomagnetic release and terminal spreaders in above panel board including drilling holes in cubicle panel, making connections, etc. as required.Rating 200 A, 30kA, FPMCCB, 415V	Each	1				
41	Providing and fixing following rating and breaking capacity and 4 pole MCCB with thermomagnetic release and terminal spreaders in the above panel board including drilling holes in cubicle panel, making connections, etc. as required Rating 63 A, 30kA, FPMCCB, 415V.	Each	9				

Signature of the Bidder

PRICE BID
Schedule - A

MEMORANDUM SHOWING THE ITEMS OF THE WORK TO BE EXECUTED

Item no.	Description of Work	Unit	Estimated Quantity	Rate	Rates to be quoted by the Contractor Both		Amount
					In Figures	In words	
42	Providing andFixing of 400 A, 4 Pole Aluminium Busbars providing nd fixing in Sheet Steel Enclosure in the above panel, with suitable insulators and supports in BusBar Cubicle and in Interconnected in MCCB and terminated to Cable Alley with necessary Control wiring and CT's and PT's, and Metering and Contol Cubicle as required.	M	1				
43	Providing and Fixing in the above panel board , suitable Metering devices Consising of Energy Meter, Voltmeter , Ammeter , Indicating Lamps , Push Buttons , etc.,	Set	1				
44	Control and Protection Circuit Consisting of CT's , PT's , OLR, EFR, SC and OCR protection, with emergency ON/OFF Tripping and Fault Indication system	Set	1				
45	Sheet Metal Work and Painting for above LT Panel, Floor mounting type Compartmentalized type, Bottom Entry for cables -'Sheet steel powder coated Enclosure: Single front CRCA-'Doors: 2mm Body: 2mm Gland: 3mm covers and partitions: 1.6mm-'IP class: IP65 weather proof enclosure for outdoor installation with canopy and powder coatedComplete as per IS Specification.	SqM	25				
46	Supply, Installation, testing and commissioning of Sub Lighting Distribution Boatd MS Vermin Proof Made of 2 mm Thickness MS Sheet duly painted for Out-door Use. 'IP class: IP65 weather proof enclosure suitable for outdoor use. IN COMING 100 Amps TPN M.C.CB -- 1NO,; Out Going DP 6A to 32 A AmpsMCB--12 Nos. Surface/ recess mounting, vertical type, 415 V, TPN MCB distribution board of sheet steel, dust protected, duly powder painted, inclusive of 200 A, tinned copper bus bar, common neutral link, earth bar, din bar for mounting MCBs (but without MCBs and incomer) as required. (Note : Vertical type MCB TPDB is normally used where 3 phase outlets are required.).	Each	1				
47	4 pole MCCB,100A,30kA, Incoming 63 Amps MCCB, 63 Amps , G Frame: Fixed Thermal & Fixed Magnetic setting | Ics = 75% of Icu, 4 P, 415 V , upto 100 A.	Each	1				
48	6 A to 32 A ratings, SP MCB, “C” curve, 10 kA breaking capacity MCB , upto 32 A.	Each	12				

Signature of the Bidder

PRICE BID
Schedule - A

MEMORANDUM SHOWING THE ITEMS OF THE WORK TO BE EXECUTED

Item no.	Description of Work	Unit	Estimated Quantity	Rate	Rates to be quoted by the Contractor Both		Amount
					In Figures	In words	
49	Supplying, Laying , Inter Connecting and Terminating of LT UG cable having aluminium conductor PVC insulated, sheathed, galvanised, steel wire/steel tap armoured cable with PVC outer sheathing 1.1 KV class.(68/4) - Class 'A' PVC Cable 3.5 core 50 sqmm ---- With all Lead & Lifts etc., complete. as per the detailed specifications and the Directions of Engineer In charge of the work, Power Cables, Solid Aluminum Conductor Up To 10 Sqmm Balance Stranded Conductor, XLPE Insulated, Cores Laid Up, PVC Innersheathed, Armoured , Core - 3.5, 120 sqmm , A2XFY, 1100V Grade As Per IS 7098(Part 1) 1988	M	275				
50	Supplying and making end termination with brass compression gland and aluminium lugs for following size of PVC insulated and PVC sheathed / XLPE aluminium conductor cable of 1.1 kV grade as required. 3½ X 120 sq. mm (45 mm)	Each	8				
51	Supplying, Laying , Inter Connecting and Terminating of LT UG cable having aluminium conductor PVC insulated, sheathed, galvanised, steel wire/steel tap armoured cable with PVC outer sheathing 1.1 KV class.(68/4) - Class `A' PVC Cable 3.5 core 70sqmm, , A2XFY, 1100V Grade As Per IS 7098(Part 1) 1988 ---- With all Lead & Lifts etc., complete. as per the detailed specifications and the Directions of Engineer In charge of the work	M	120				
52	Supplying and making end termination with brass compression gland and aluminium lugs for following size of PVC insulated and PVC sheathed / XLPE aluminium conductor cable of 1.1 kV grade as required. (DSR 2016, Item code : 9.1.23, Pg No 35, 3½ X 70 sq. mm (38 mm)	each	4				
53	Supplying, Laying , Inter Connecting and Terminating of LT UG cable having aluminium conductor PVC insulated, sheathed, galvanised, steel wire/steel tap armoured cable with PVC outer sheathing 1.1 KV class.(68/4) - Class `A' PVC Cable 4 core 35sqmm, A2XFY, 1100V Grade As Per IS 7098(Part 1) 1988 ---- With all Lead & Lifts etc., complete. as per the detailed specifications and the Directions of Engineer In charge of the work		250				
54	Supplying and making end termination with brass compression gland and aluminium lugs for following size of PVC insulated and PVC sheathed / XLPE aluminium conductor cable of 1.1 kV grade, 4 core 35sqmm as required.	each	20				

Signature of the Bidder

PRICE BID
Schedule - A

MEMORANDUM SHOWING THE ITEMS OF THE WORK TO BE EXECUTED

Item no.	Description of Work	Unit	Estimated Quantity	Rate	Rates to be quoted by the Contractor Both		Amount
					In Figures	In words	
55	Supplying, Laying , Inter Connecting and Terminating of LT UG cable having aluminium conductor PVC insulated, sheathed, galvanised, steel wire/steel tap armoured cable with PVC outer sheathing 1.1 KV class.(68/4) - Class `A' PVC Cable 4 core 10 sqmm, A2XFY, 1100V Grade As Per IS 7098(Part 1) 1988 ---- With all Lead & Lifts etc., complete. as per the detailed specifications and the Directions of Engineer In charge of the work	M	100				
56	Supplying and making end termination with brass compression gland and aluminium lugs for following size of PVC insulated and PVC sheathed / XLPE aluminium conductor cable of 1.1 kV grade as required.	each	8				
57	Supply, installation, testing & commisioning of Flush/Recess mounted luminaire with housing made of CRCA sheet steel powder coated complete with electronic ballast and Acrylic diffuser, 4 Feet Fittings, 40 Watts with LED lamp and all other accessories etc. Luminaire to be suitable for outdoor use only, meeting 'IP class: IP65 (weather proof enclosure for outdoor installation), (Cat Ref No Magnum 40 of Havells make or Equivalent).	Nos	92				
58	Supply, installation, testing & commisioning of 80 watts LED Street Lighting luminaire with housing made of CRCA sheet steel powder coated complete with electronic ballast and Acrylic diffuser, with LED lamp and all other accessories etc. Luminaire to be suitable for outdoor use only, meeting 'IP class: IP65 (weather proof enclosure for outdoor installation).	Nos	4				
59	Point wiring using Copper wire without switch. Supplying and wiring adopting loop system in Existing /Provided M S Tubes(square/Rectangular tubes) provided in the steel structure, using copper PVC insulated multi strand 2X2.5Sqmm and 1X1.5 Sqmm copper wire without switch, the other end of the wires shall be terminated with sufficient loose length in a GI Modular Boxes omplete for each outlet.. I. Point wiring using class A Materials b) Medium point above 3Mtr up to 6Mtr from tapping point to Luminaire ---- With all Lead & Lifts etc., complete. as per the detailed specifications and the Directions of Engineer In charge of the work	M	1200				
60	6A sockets(Material & Labour) with all necessary accessories.	Nos	6				
61	Supply & Laying of 2Rx2.5sqmm+1Rx 1.5sqmm cu cable through 19mm pvc conduit(Material & Labour)	M	200				
62	Earthing with G.I. earth pipe 4.5 meter long, 40 mm dia including accessories, and providing masonry enclosure with cover plate having locking arrangement and watering pipe etc. with charcoal/ coke and salt as required.	Set	6				

Signature of the Bidder

PRICE BID
Schedule - A

MEMORANDUM SHOWING THE ITEMS OF THE WORK TO BE EXECUTED

Item no.	Description of Work	Unit	Estimated Quantity	Rate	Rates to be quoted by the Contractor Both		Amount
					In Figures	In words	
63	Earthing with G.I. earth plate 600 mm X 600 mm X 6 mm thick including accessories, and providing masonry enclosure with cover plate having locking arrangement and watering pipe of 2.7 meter long etc. with charcoal/ coke and salt as required.	Set	2				
64	Supplying and laying 25 mm X 5 mm copper strip at 0.50 meter below ground as strip earth electrode, including connection/ terminating with nut, bolt, spring, washer etc. as required. (Jointing shall be done by overlapping and with 2 sets of brass nut bolt & spring washer spaced at 50 mm.	Mtr	50				
65	Supplying and laying 25 mm X 5 mm G.I strip at 0.50 meter below ground as strip earth electrode, including connection/ terminating with G.I. nut, bolt, spring, washer etc. as required. (Jointing shall be done by overlapping and with 2 sets of G.I. nut bolt & spring washer spaced at 50 mm.	Mtr	150				
66	Providing and fixing 6 SWG dia G.I. wire on surface or in recess for loop earthing along with existing surface/ recessed conduit/ submain wiring/ cable as required.	Mtr	60				
67	Supplying & Fixing CCTV Camera	Nos	6				
68	Supplying & laying of CCTV Coaxial cable(2 Coils)-1coil=80Mtrs)(complete with G.I Saddles & Spacers at 0.3 mtr)	M	200				
69	Supplying & Fixing of CCTV DVR(Digital Video Recorder)Box	Nos	1				
70	4U Rack with lock accessories	Nos	1				
71	Supply & Fixing of Fire Extinguishers-ABC Type	Nos	10				
71	**Total excluding taxes**						
72	**GST (Goods & services Tax)**						
73	**Grand Total including GST (In words)**						
74	**Grand Total including GST (In Figures)**						

Note:

1. The evaluation of bid will be undertaken based on the prices quoted in Schedule A (BoQ items only)

2. Bidders are NOT TO QUOTE for utility shifting in Schedule -B.

3 The approximate cost of works indicated in the NIT, Sl. No.2, is inclusive of utility shifting charges.

Signature of the Bidder

PRICE BID
SCHEDULE-B

MEMORANDUM SHOWING THE LIST OF UTILITY ITEMS OF THE WORK TO BE EXECUTED

Item no.	Description of Work	Unit	Estimated Quantity	Rate	Rates to be quoted by the Contractor	Approximate Amount (INR)
1	**a)** Utilities identification, preparation of utility plans, Diversion of utilities, Relocation of Services and Tree Transplantation Works, Service Lines such as Water Supply, Underground Drainage, Electrical, Telephone, Optical Fibre Cables, etc. those are incidental and obstructing, are to be permanently diverted in an acceptable manner to the Concerned Service Departments so that not to hinder the Services of the Lines. *(The utility drawing is enclosed in VOLUME- 3 TENDER DRAWING as "Utility Plan at Alandur Metro Station vide drawing No. IS-1423-HIG-UTY-001-Revision-R7).* **b)** Removal and Relocation of Existing Bus Shelters, Traffic Signages and Signals, Hoardings, Advertisement Boards and Appurtenant Structures, within the Battery Limit, if any, to the Location within or beyond the Battery Limit as approved by the Employer. The payments for these works will be made as per rates of concerned departments, DSR-2016, CPWD and as per actuals, subject to producing documentary evidence of work completion.	(PLEASE REFER NOTES BELOW)		NA	***Not to be quoted***	2,00,00,000/- (PLEASE REFER NOTES BELOW)

BREAKUP FOR UTILITY SHIFTING WORKS AS MENTIONED ABOVE
(THESE AMOUNTS ARE ONLY INDICATIVE)

2	**Approximate BREAK UP of COSTS FOR UTILTIY SHIFTING OF THE WORKS LISTED UNDER 1(a) of SCHEDULE-B**					
(i).	Utility shifting (as per latest SoR of CMWSSB)	(Refer Note)		NA	***Not to be quoted***	INR 99,,60,000/-
(ii)	Utility Shifting (as per latest SoR of BSNL)	(Refer Note)		NA	***Not to be quoted***	INR 40,00,570/-
(iii)	Utility Shifting (as per latest SoR of TNEB)	(Refer Note)		NA	***Not to be quoted***	INR 50,00,000/-
3	**APPROXIMATE BREAK UP of COSTS OF ITEMS MENTIONED IN 1(b) OF SCHEDULE-B:**					
(i)	Removal/Relocation of existing bus shelters, as per DSR,2016, CPWD.	(Refer Note)		NA	***Not to be quoted***	INR 11,00,000/-

Notes:
1. The evaluation of bid will be undertaken based on the prices quoted in Schedule A (BoQ items only)
2. Bidders need "NOT QUOTE" their rates for above works in Schedule-'B'.
3. The approximate cost of works indicated in the NIT, Sl. No.2, is inclusive of utility shifting charges of approximately INR 2,00,000,00 Cr, for shifting of various utilities, under 1(a) & (b) of Schedule - B.
4. Payments will be made as per rates of CMWSSB, BSNL, TNEB, and other departments and as per actuals, subject to producing documentary evidence of work completion.
5. The above amounts are indicative only and are payable only if they are executed, after prior approval from CMRL.
6. The total amount as per schedule-B and its breakup is likely to vary to any extent (0 to 100%) as per requirement during execution. The contractor shall not have any claim for any positive or negative variation in Schedule-B.
7.Payments for any miscellaneous items not considered in Schedule-A and Schedule-B will be paid as per clause 38.3 of tender document.

CHENNAI METRO RAIL LIMITED CHENNAI-600107				
NIT No. CMRL/CON/SAL-FOB-RT-02/2017				
SUMMARY SHEET for Bid Prices				
Sl.No.	***Particulars***	***Amount in figures (INR)***	***Amount in words(INR)***	***Remarks***
1	***Schedule A-BoQ items (Sl. No. 1 to 71)***			*To be quoted by the bidder*
2	***Schedule B***	2,00,00,000/-	Two Crores only	***NOT to be quoted by the bidder***
3	***Goods & Service Tax @ (i) In percent.....% (ii) In amount***			*To be quoted by the bidder*
4	***Total tender price including GST***			*To be quoted by the bidder*

Note:
1. Bidders are to quote the prices in figures & words in Sl. No.1 above.
*2. Bidders are **NOT** to quote the price in schedule-B in Sl. No. 2 above.*
3. Bidders are to mention the % & amount of GST in words and figures.

Government of India

CHENNAI METRO RAIL LIMITED

CHENNAI METRO RAIL LIMITED

Admin Building, CMRL Depot, Poonamallee High Road, Koyambedu,
Chennai -600107, Tamil Nadu, India.

TENDER DRAWINGS

FOR

Construction of Foot Over Bridge (FOB) with escalator and lifts at Alandur CMRL Metro Station and across GST Road at Km 12/6 of G.S.T Road

Volume- 3

INFRASTRUCTURE CONSULTANTS:

Infra Support
Your complete Engineering partner

Infra Support Engineering Consultants Pvt. Ltd.
An ISO 9001-2008 Certified Company
#934, 3rd Cross, HRBR Layout 1st Block Kalyana nagar,
Bangalore-560043. Ph: +9180 25421364
e-mail: corporate@infrasupport.in, www.infrasupport.in

November - 2016

INDEX SHEET

Sl No.	Drawing No.	Revision	Drawing Title
1	IS - 1423 - HIG - AL - KM - 001	R7	Key map at Alandur Metro Station
2	IS - 1423 - HIG - AL - TOP-001	R7	Topographical Plan at Alandur Metro Station
3	IS - 1423 - HIG - AL - PL-001	R7	Plan of Foot over Bridge at Alandur Metro Station
4	IS - 1423 - HIG - AL - GAD- 001	R7	General Arrangement Drawing of Foot over Bridge at Alandur Metro Station
5	IS - 1423 - HIG - AL - SE - 001	R7	Details of Longitudinal Section 1-1 of Foot Over Bridge at Alandur Metro Station
6	IS - 1423 - HIG - AL - SE - 002	R7	Details of Longitudinal Section 1-1 of Foot Over Bridge at Alandur Metro Station
7	IS - 1423 - HIG - AL - SE - 003	R7	Details of Staircase Section 2-2 of Foot Over Bridge at Alandur Metro Station
8	IS - 1423 - HIG - AL - SE - 004	R7	Details of Staircase Section 2-2 of Foot Over Bridge at Alandur Metro Station
9	IS - 1423 - HIG - AL - SE - 005	R7	Details of Staircase Section 2-2 of Foot Over Bridge at Alandur Metro Station
10	IS - 1423 - HIG - AL - SE - 006	R7	Escalator, Side Elevation & Joint Details of Foot Over Bridge at Alandur Metro Station
11	IS - 1423 - HIG - AL - SE - 007	R7	Escalator, Side Elevation & Joint Details of Foot Over Bridge at Alandur Metro Station
12	IS - 1423 - HIG - AL - SE - 008	R7	Escalator, Side Elevation & Joint Details of Foot Over Bridge at Alandur Metro Station
13	IS - 1423 - HIG - AL - SE - 009	R7	Side Elevation Details of Foot Over Bridge at Alandur Metro Station
14	IS - 1423 - HIG - AL - SE - 010	R7	Elevation Details at Median Portion of Foot Over Bridge at Alandur Metro Station
15	IS - 1423 - HIG - AL - SE - 011	R7	Elevation Details at Median Portion of Foot Over Bridge at Alandur Metro Station
16	IS - 1423 - HIG - AL - SE - 012	R7	Side Elevation Details of Foot Over Bridge at Alandur Metro Station
17	IS - 1423 - HIG - AL - SE - 013	R7	Side Elevation Details of Foot Over Bridge at Alandur Metro Station
18	IS - 1423 - HIG - AL - SE - 014	R7	Tube Details of Foot Over Bridge at Alandur Metro Station
19	IS - 1423 - HIG - AL - SE - 015	R7	Foundation Layout of Foot Over Bridge at Alandur Metro Station
20	IS - 1423 - HIG - AL - SE - 016	R7	Foundation Layout of Foot Over Bridge at Alandur Metro Station
21	IS - 1423 - HIG - AL - SE - 017	R7	Foundation Layout of Foot Over Bridge at Alandur Metro Station
22	IS - 1423 - HIG - AL - SE - 018	R7	Top & Bottom Plan of Foot Over Bridge at Alandur Metro Station
23	IS - 1423 - HIG - AL - SE - 019	R7	Foundation Layout of Foot Over Bridge at Alandur Metro Station
24	IS - 1423 - HIG - AL - SE - 020	R7	Foundation Layout of Foot Over Bridge at Alandur Metro Station
25	IS - 1423 - HIG - AL - SE - 021	R7	Foundation Layout of Foot Over Bridge at Alandur Metro Station
26	IS - 1423 - HIG - AL - SE - 022	R7	Foundation Layout of Foot Over Bridge at Alandur Metro Station
27	IS - 1423 - HIG - AL -EL- 001	R7	ESCALATOR DETAILS (As provided by the Manufacturer)
28	IS - 1423 - HIG - AL -LD- 001	R7	LIFT DETAILS (As provided by the Manufacturer)
29	IS - 1423 - HIG - AL -EL -001	R7	Electrical Layout Plan
30	IS - 1423 - HIG - AL -EL -002	R7	Electrical Plan
31	IS - 1423 - HIG - AL -EL -003	R7	Power Distribution Scheme
32	IS - 1423 - HIG - AL -EL- 001	R7	Elevation of Foot Over Bridge at Alandur Metro Station (Option - 1)
33	IS - 1423 - HIG - AL -EL- 002	R7	Side Elevation of Foot Over Bridge at Alandur Metro Station (Option - 2)
34	IS - 1423 - HIG - AL -EL- 003	R7	Side Elevation of Foot Over Bridge at Alandur Metro Station (Option- 1)
35	IS - 1423 - HIG - AL -PL- 001	R7	Plan & Cross Section of Proposed Footpath
36	IS - 1423 - HIG - AL - UTY -001	R7	Utility Plan at Alandur Metro Station

SI NO.	DESCRIPTION	REVISION.	BY	DATE
01	R6 drawings were proof checked by IIT-M	R7	IIT-M	17/12/2015 11/08/2016

RELEASED FOR
- [ ] INFORMATION
- [ ] Draft D P R
- [ ] D P R
- [x] TENDER
- [ ] CONSTRUCTION

NOTES :

CLIENT :
CHENNAI METRO RAIL LIMITED
Admin Building, CMRL Depot, Poonamallee High Road, Koyambedu, Chennai -600107, Tamil Nadu, India.

CONSULTANT:
Infra Support
Your Complete Engineering Partner
INFRA SUPPORT ENGINEERING CONSULTANTS PVT. LTD.
An ISO 9001-2008 Certified Company
#934, 3rd Cross, HRBR Layout 1st Block
Kalyana nagar, Bangalore 560043, India
Phone: +91 80 25421364
corporate@infrasupport.in www.infrasupport.in

DESIGNED	AKK	PROJECT:	***Preparation of Feasibility Report & Detailed Project Report for Construction of Pedestrian Subways at Two Locations in Chennai for the Chennai Metropolitan Development Authority (CMDA)***
DRAWN	PHG		JOB NO. 1423
CHECKED	RR	TITLE :	INDEX SHEET
DATE	Nov - 2016		REVISION
SHEET	1 of 1	SCALE: NTS	DRG. NO. : IS - 1423 - HIG - AL - IS - 001 — R7

KEY MAP

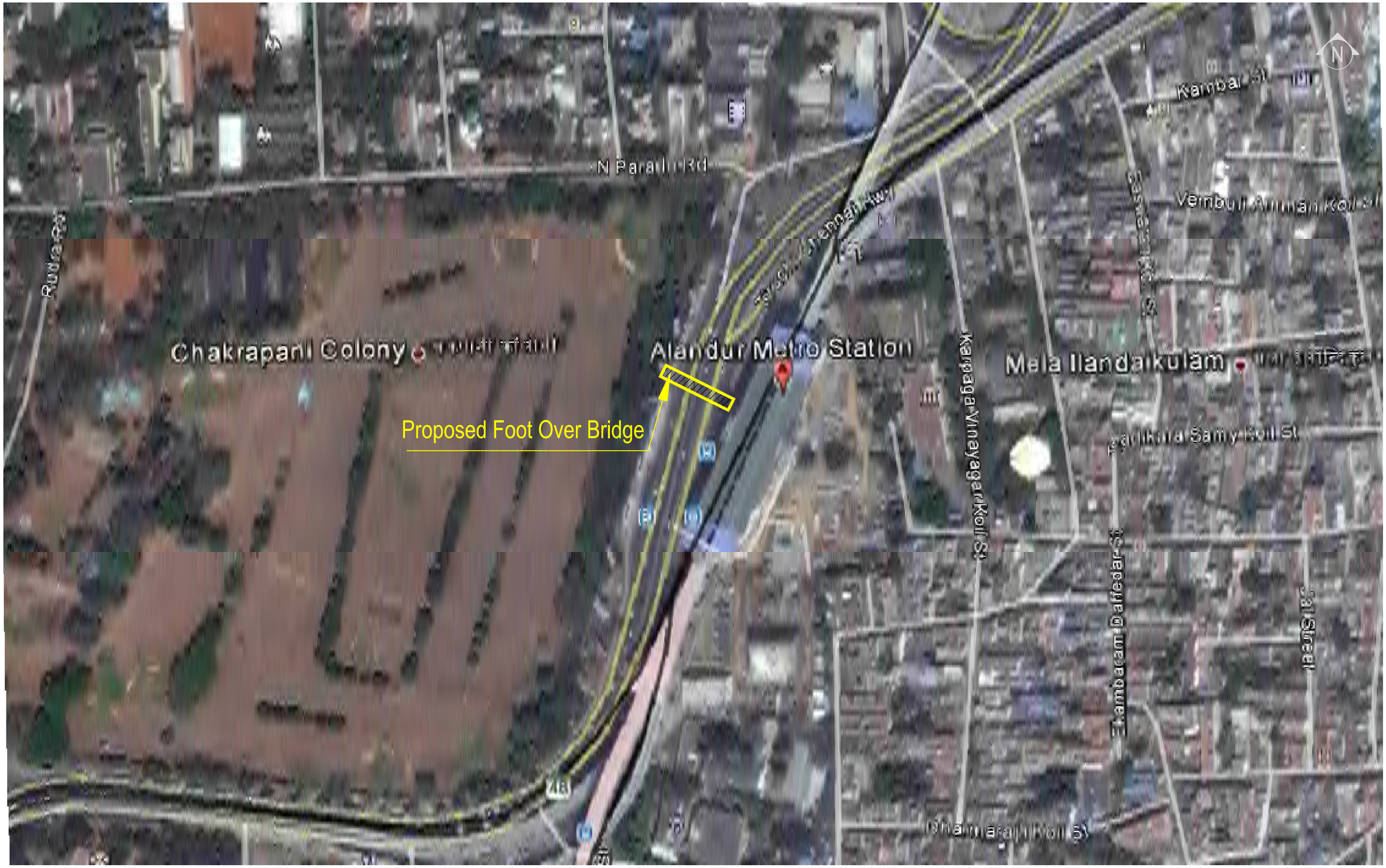

SI NO.	DESCRIPTION	REVISION.	BY	DATE
01	R6 drawings were proof checked by IIT-M	R7	IIT-M	17/12/2015 11/08/2016

RELEASED FOR
- [ ] INFORMATION
- [ ] Draft D P R
- [ ] D P R
- [x] TENDER
- [ ] CONSTRUCTION

NOTES :
All Dimensions are in 'm'.

CLIENT :
CHENNAI METRO RAIL LIMITED
Admin Building, CMRL Depot, Poonamallee High Road, Koyambedu, Chennai -600107, Tamil Nadu, India.

CONSULTANT:
Infra Support
Your Complete Engineering Partner
INFRA SUPPORT ENGINEERING CONSULTANTS PVT. LTD.
An ISO 9001-2008 Certified Company
#934, 3rd Cross, HRBR Layout 1st Block
Kalyana nagar, Bangalore 560043, India
Phone: +91 80 25421364
corporate@infrasupport.in www.infrasupport.in

DESIGNED	AKK
DRAWN	PHG
CHECKED	RR
DATE	Nov - 2016
SHEET	1 of 1

PROJECT: ***Preparation of Feasibility Report & Detailed Project Report for Construction of Pedestrian Subways at Two Locations in Chennai for the Chennai Metropolitan Development Authority (CMDA)***

TITLE : Keymap of Foot Over Bridge at Alandur Metro Station

SCALE: NTS

DRG. NO. : IS - 1423 - HIG - AL - KM - 001

JOB NO. 1423

REVISION R7

PLAN

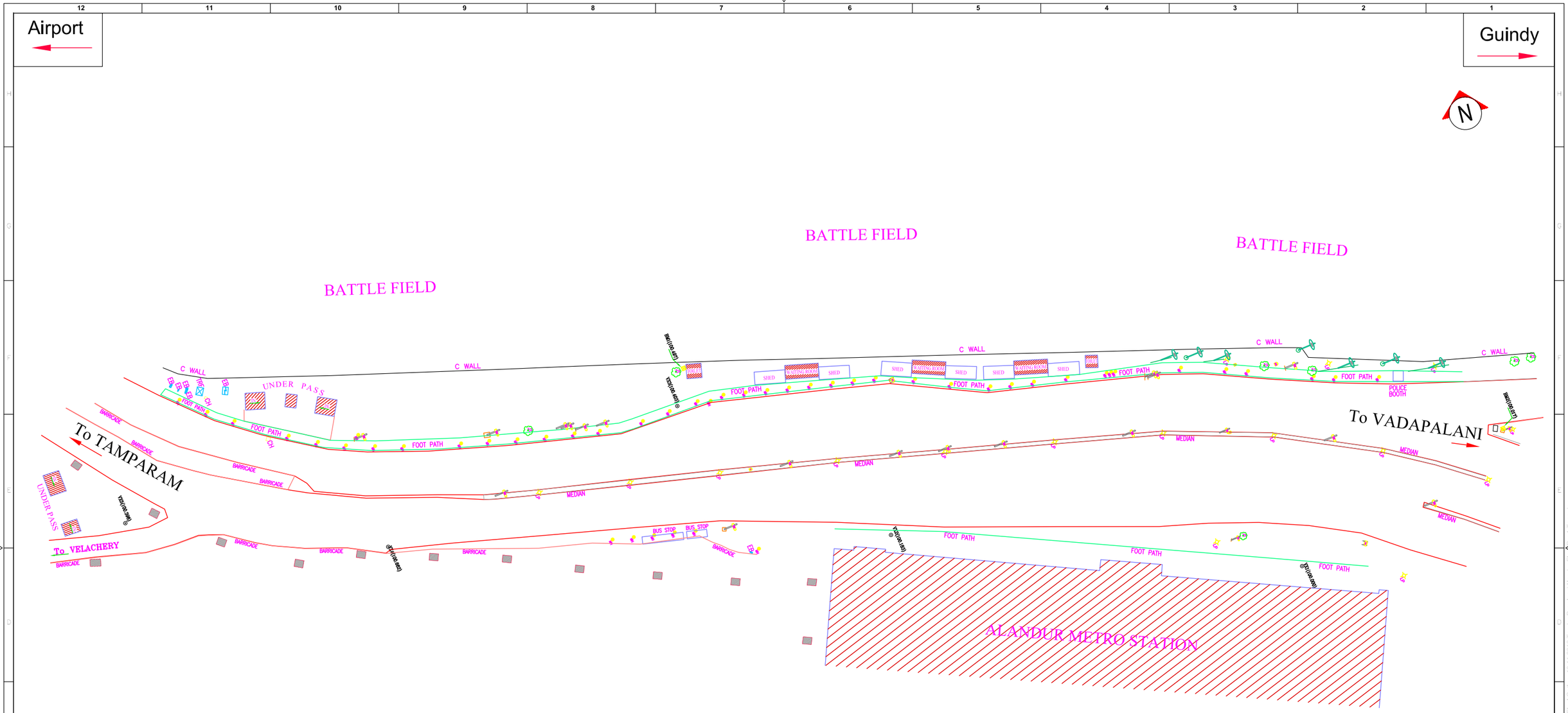

SI NO.	DESCRIPTION	REVISION.	BY	DATE
01	R6 drawings were proof checked by IIT-M	R7	IIT-M	17/12/2015 11/08/2016

RELEASED FOR
- [ ] INFORMATION
- [ ] Draft D P R
- [ ] D P R
- [x] TENDER
- [ ] CONSTRUCTION

NOTES :
All Dimensions are in 'm'.

CLIENT :
CHENNAI METRO RAIL LIMITED
Admin Building, CMRL Depot, Poonamallee High Road, Koyambedu, Chennai -600107, Tamil Nadu, India.

CONSULTANT:
Infra Support
Your Complete Engineering Partner
INFRA SUPPORT ENGINEERING CONSULTANTS PVT. LTD.
An ISO 9001-2008 Certified Company
#934, 3rd Cross, HRBR Layout 1st Block
Kalyana nagar, Bangalore 560043, India
Phone: +91 80 25421364
corporate@infrasupport.in www.infrasupport.in

DESIGNED	AKK
DRAWN	PHG
CHECKED	RR
DATE	Nov - 2016
SHEET	1 of 1

PROJECT: ***Preparation of Feasibility Report & Detailed Project Report for Construction of Pedestrian Subways at Two Locations in Chennai for the Chennai Metropolitan Development Authority (CMDA)***

TITLE : Topographical Plan at Alandur Metro Station

SCALE: NTS

DRG. NO. : IS - 1423 - HIG - AL - TOP - 001

JOB NO. 1423

REVISION R7

STRUCTURE DRAWINGS

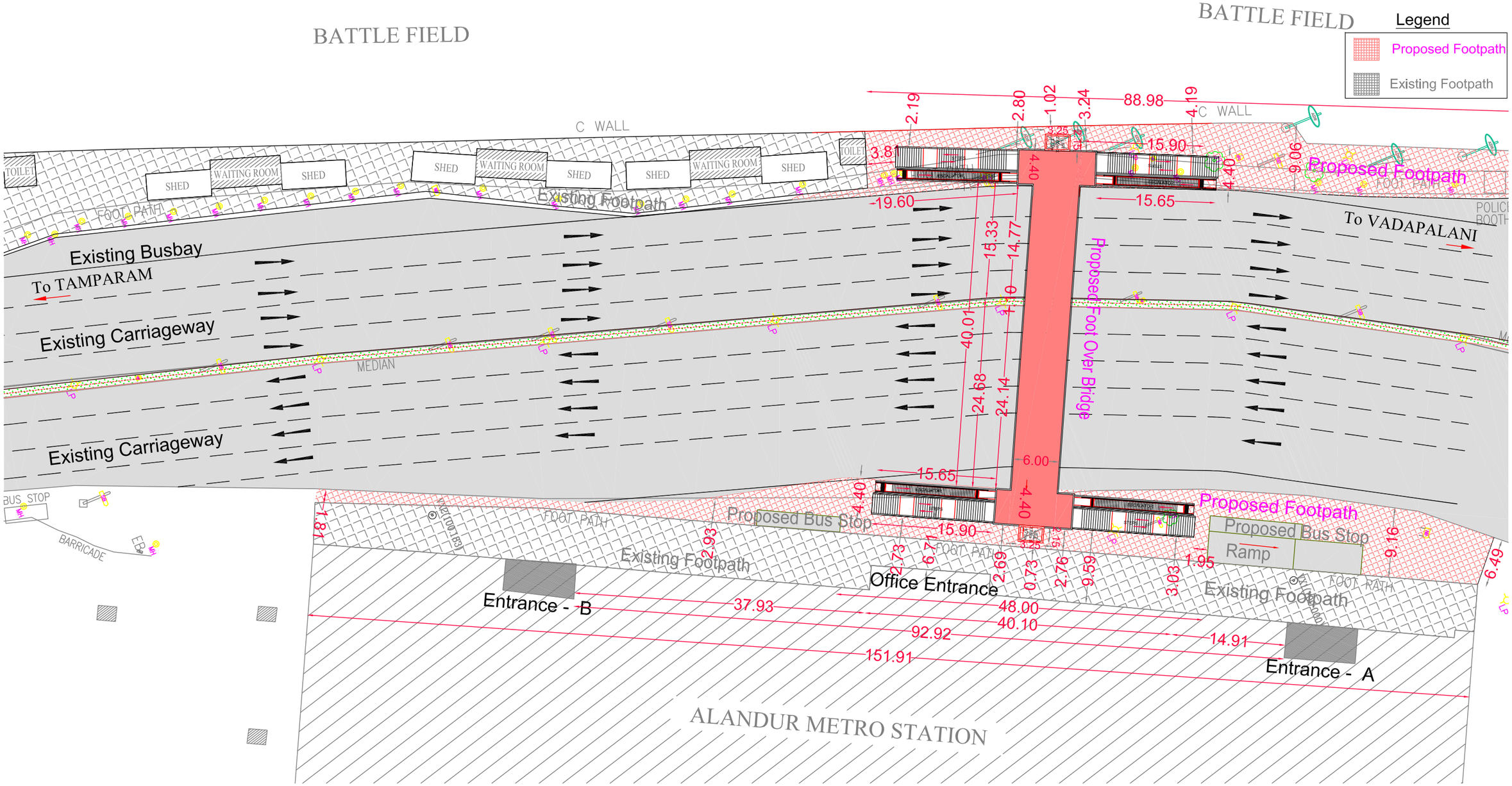

SI NO.	DESCRIPTION	REVISION.	BY	DATE
01	R6 drawings were proof checked by IIT-M	R7	IIT-M	17/12/2015 11/08/2016

RELEASED FOR
- [ ] INFORMATION
- [ ] Draft D P R
- [ ] D P R
- [x] TENDER
- [ ] CONSTRUCTION

NOTES :
All Dimensions are in 'm'.

CLIENT :
CHENNAI METRO RAIL LIMITED
Admin Building, CMRL Depot, Poonamallee High Road, Koyambedu, Chennai -600107, Tamil Nadu, India.

CONSULTANT:
Infra Support
Your Complete Engineering Partner
INFRA SUPPORT ENGINEERING CONSULTANTS PVT. LTD.
An ISO 9001-2008 Certified Company
#934, 3rd Cross, HRBR Layout 1st Block
Kalyana nagar, Bangalore 560043, India
Phone: +91 80 25421364
corporate@infrasupport.in www.infrasupport.in

DESIGNED	AKK
DRAWN	PHG
CHECKED	RR
DATE	Nov - 2016
SHEET	1 of 1

PROJECT: *Preparation of Feasibility Report & Detailed Project Report for Construction of Pedestrian Subways at Two Locations in Chennai for the Chennai Metropolitan Development Authority (CMDA)*

TITLE : Plan of Foot Over Bridge at Alandur Metro Station

SCALE: NTS

DRG. NO. : IS - 1423 - HIG - AL - PL - 001

JOB NO. 1423

REVISION R7

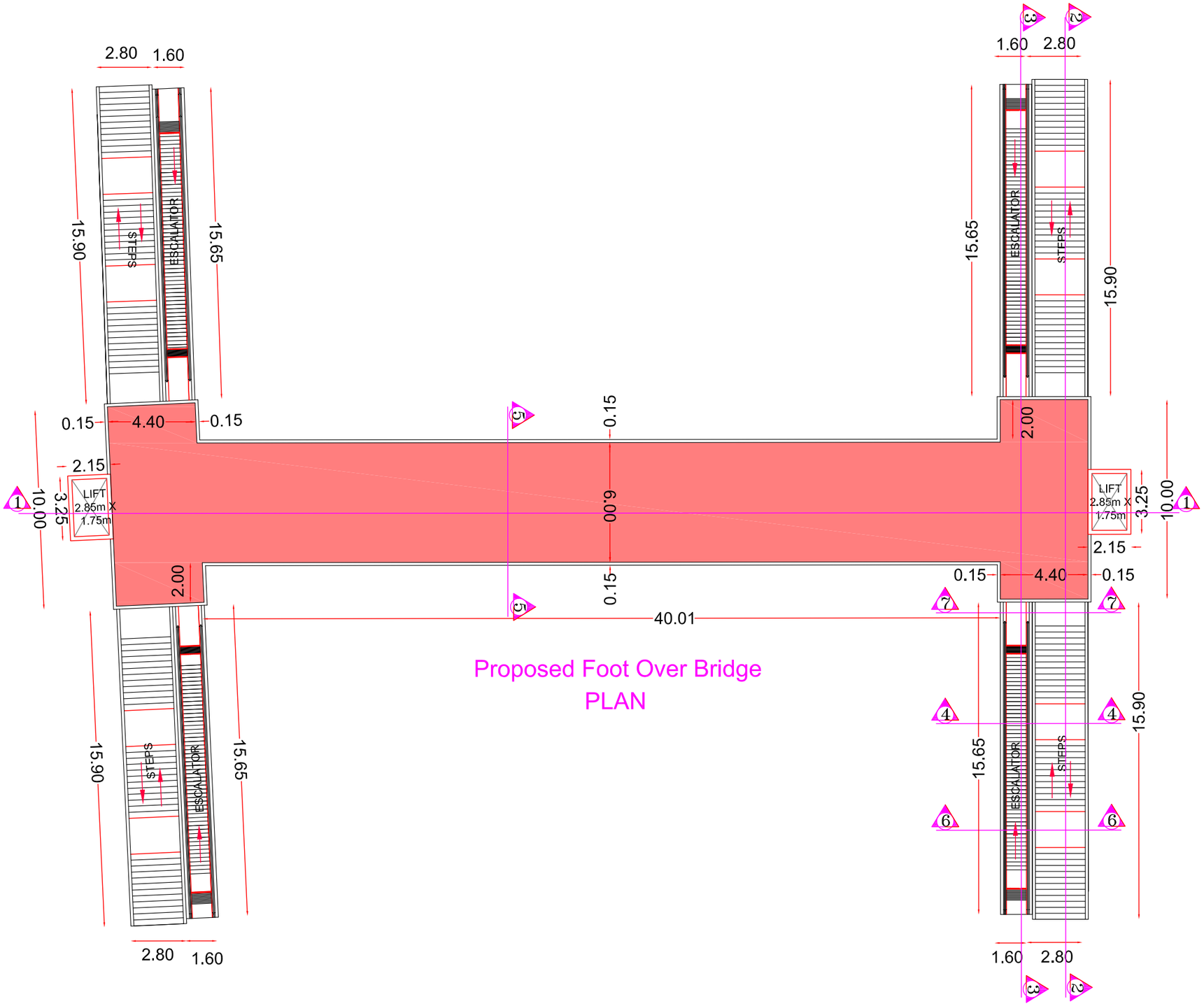

Proposed Foot Over Bridge
PLAN

SI NO.	DESCRIPTION	REVISION.	BY	DATE
01	R6 drawings were proof checked by IIT-M	R7	IIT-M	17/12/2015 11/08/2016

RELEASED FOR
- [ ] INFORMATION
- [ ] Draft D P R
- [ ] D P R
- [x] TENDER
- [ ] CONSTRUCTION

NOTES :
All Dimensions are in 'm'.

CLIENT :
CHENNAI METRO RAIL LIMITED
Admin Building, CMRL Depot, Poonamallee High Road, Koyambedu, Chennai -600107, Tamil Nadu, India.

CONSULTANT:
Infra Support
Your Complete Engineering Partner
INFRA SUPPORT ENGINEERING CONSULTANTS PVT. LTD.
An ISO 9001-2008 Certified Company
#934, 3rd Cross, HRBR Layout 1st Block
Kalyana nagar, Bangalore 560043, India
Phone: +91 80 25421364
corporate@infrasupport.in www.infrasupport.in

DESIGNED	AKK
DRAWN	PHG
CHECKED	RR
DATE	Nov - 2016
SHEET	1 of 1

PROJECT: ***Preparation of Feasibility Report & Detailed Project Report for Construction of Pedestrian Subways at Two Locations in Chennai for the Chennai Metropolitan Development Authority (CMDA)***

TITLE : General Arrangement Drawing of Foot Over Bridge at Alandur Metro Station

SCALE: NTS

DRG. NO. : IS - 1423 - HIG - AL - GAD - 001

JOB NO. 1423

REVISION R7

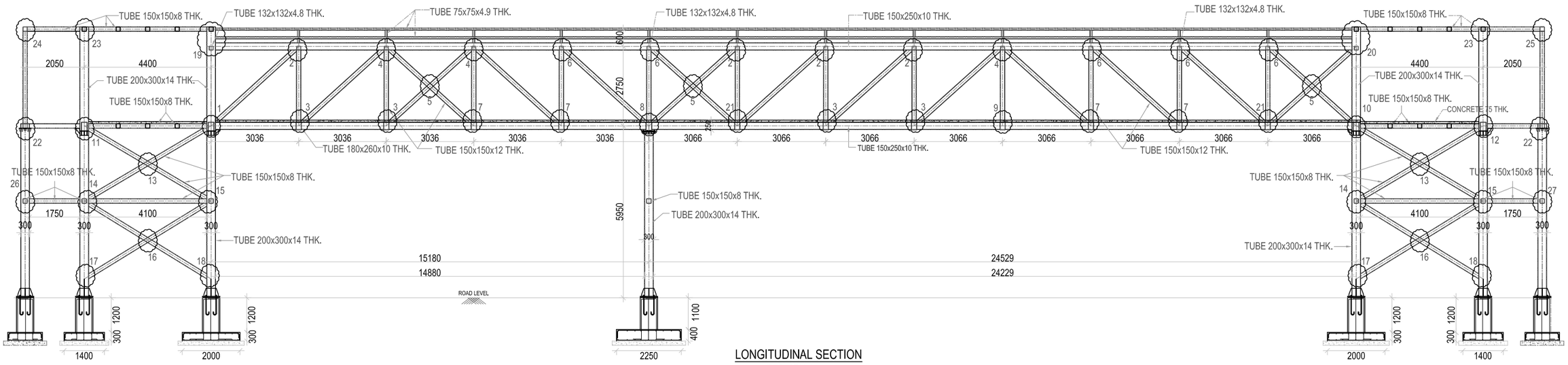

LONGITUDINAL SECTION

SECTION 1 - 1

SCALE 1:100

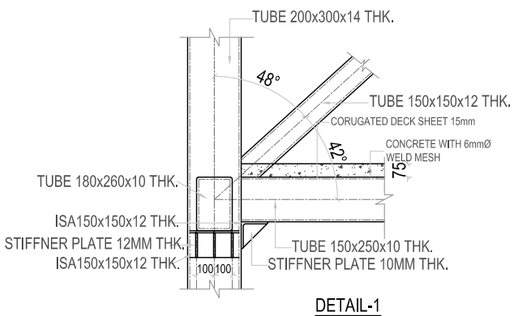

DETAIL-1

SCALE-25

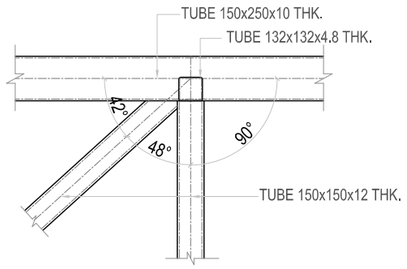

DETAIL-2

SCALE-25

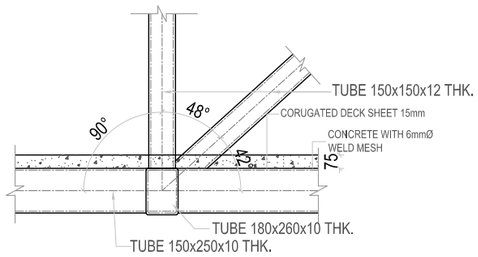

DETAIL-3

SCALE-25

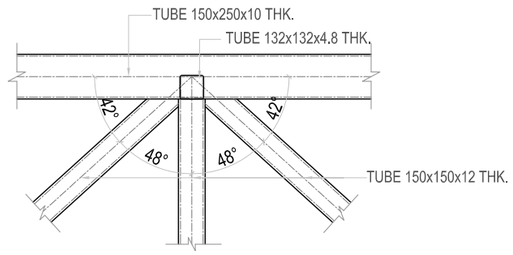

DETAIL-4

SCALE-25

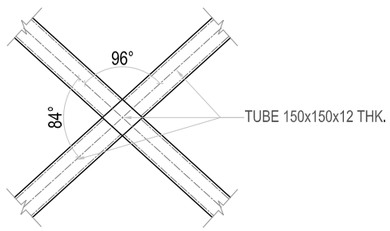

DETAIL-5

SCALE-25

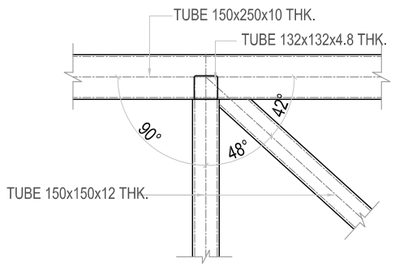

DETAIL-6

SCALE-25

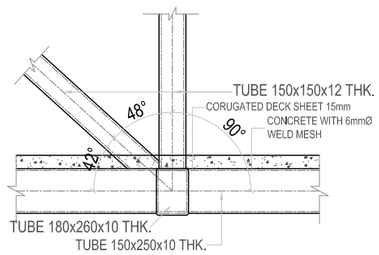

DETAIL-7

SCALE-25

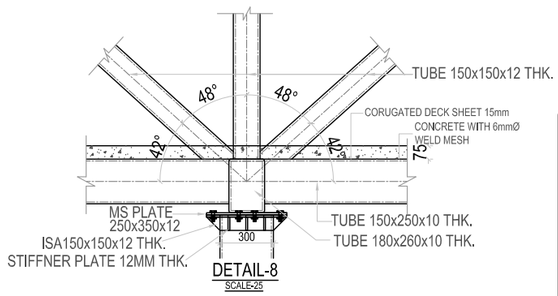

DETAIL-8

SCALE-25

NOTES:

1. ALL DIMENSIONS ARE IN MILLI METER. EXCEPT LEVELS, WHICH ARE IN METERS. DO NOT SCALE THE DRAWING. ONLY WRITEN DIMENSIONS ARE ARE TO BE FOLLOWED.
2. ALL STEEL FABRICATION SHALL BE AS PER IS 800.
3. ALL WELDS ARE FILLET WELD OF 6 MM SIZE UNLESS OTHERWISE SPECIFIED.
4. WELDING SHALL BE DONE AS PER IS 816 -69 FOR ARC WELDING.
5. ALL STRUCTURAL STEEL SHALL BE CONFIRMING TO IS 2062 .
6. ALL RCC WORKS SHALL CONFIRM TO IS 456-2000
7. CLEAR COVER TO MAIN REINFORCEMENT SHALL BE FOLLOWS:
   a) Footings = 50 mm b) Column = 40mm.
8. GRADE OF CONCRETE SHALL BE M25
9. `Y' DENOTES HYSD BARS (Fe 500)
10. 150kN/sq.m SBC IS CONSIDERED AT A DEPTH OF 1.5M BELOW EXISTING GROUND LEVEL.
11. For Foundation Details Refer Drawing: IS-1423-HIG-AL-SE-014

SI NO.	DESCRIPTION	REVISION.	BY	DATE
01	R6 drawings were proof checked by IIT-M	R7	IIT-M	17/12/2015
				11/08/2016

RELEASED FOR
- INFORMATION
- Draft D P R
- D P R
- TENDER
- CONSTRUCTION

NOTES :

CLIENT :

CHENNAI METRO RAIL LIMITED

Admin Building, CMRL Depot, Poonamallee High Road, Koyambedu, Chennai -600107, Tamil Nadu, India.

CONSULTANT:

Infra Support
Your Complete Engineering Partner

INFRA SUPPORT ENGINEERING CONSULTANTS PVT. LTD.

An ISO 9001-2008 Certified Company
#934, 3rd Cross, HRBR Layout 1st Block
Kalyana nagar, Bangalore 560043, India
Phone: +91 80 25421364
corporate@infrasupport.in www.infrasupport.in

DESIGNED	AKK
DRAWN	PHG
CHECKED	RR
DATE	Nov - 2016
SHEET	1 of 22

PROJECT: ***Preparation of Feasibility Report & Detailed Project Report for Construction of Pedestrian Subways at Two Locations in Chennai for the Chennai Metropolitan Development Authority (CMDA)***

TITLE : Details of Longitudinal Section 1-1 of Foot Over Bridge at Alandur Metro Station

SCALE: NTS

DRG. NO. : IS - 1423 - HIG - AL - SE - 001

JOB NO. 1423

REVISION R7

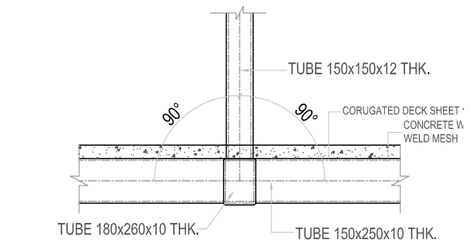

DETAIL-9
SCALE-25

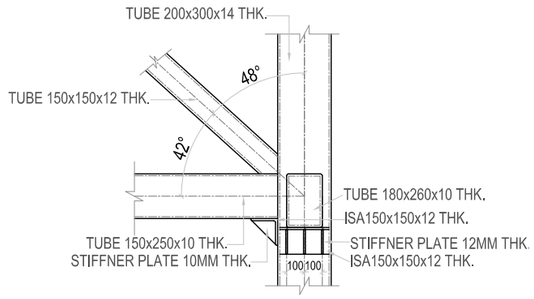

DETAIL-10
SCALE-25

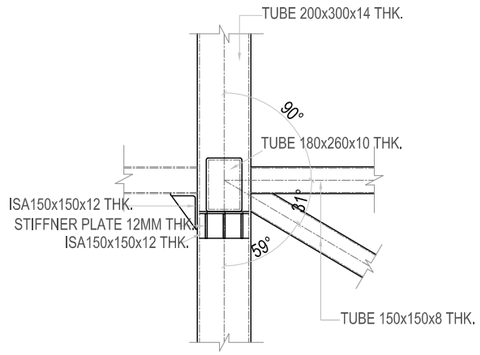

DETAIL-11
SCALE-25

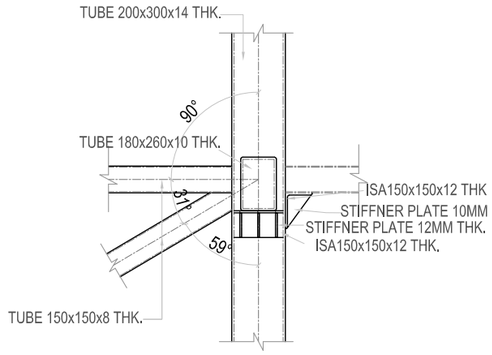

DETAIL-12
SCALE-25

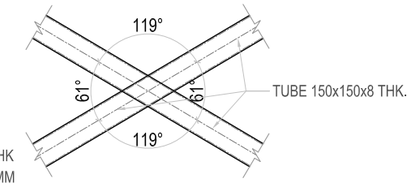

DETAIL-13
SCALE-25

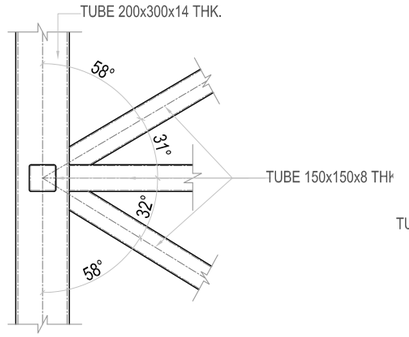

DETAIL-14
SCALE-25

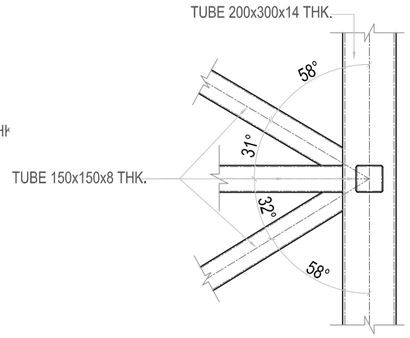

DETAIL-15
SCALE-25

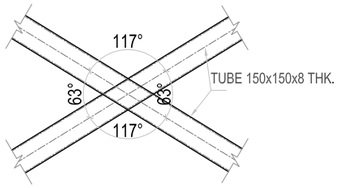

DETAIL-16
SCALE-25

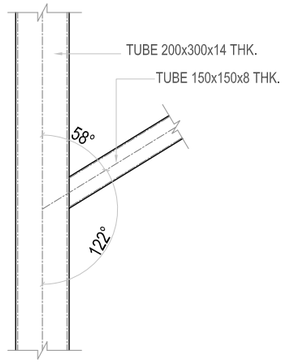

DETAIL-17
SCALE-25

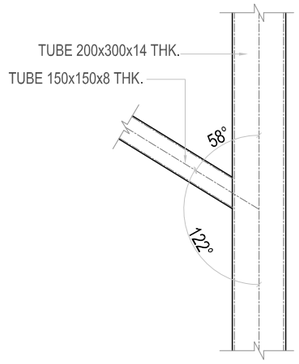

DETAIL-18
SCALE-25

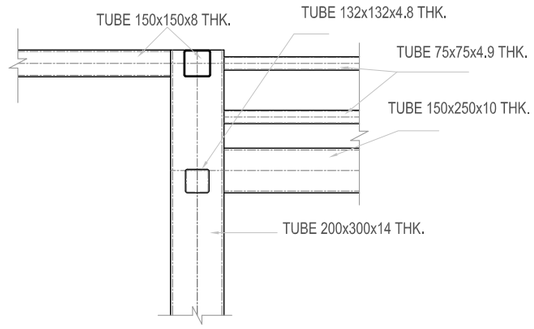

DETAIL-19
SCALE-25

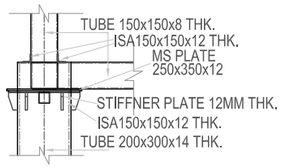

DETAIL-22
SCALE-25

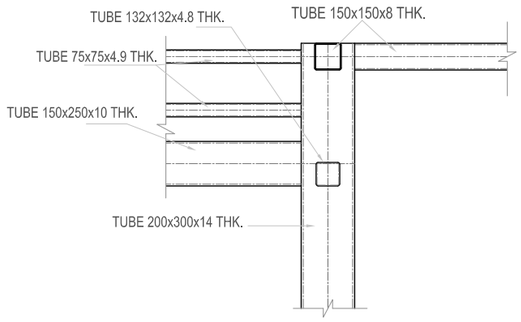

DETAIL-20
SCALE-25

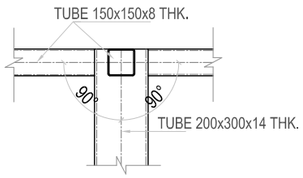

DETAIL-23
SCALE-25

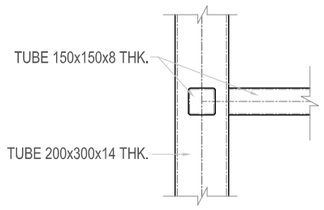

DETAIL-26
SCALE-25

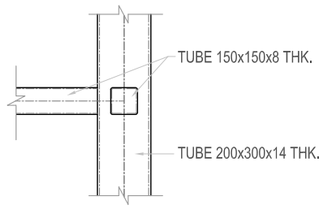

DETAIL-27
SCALE-25

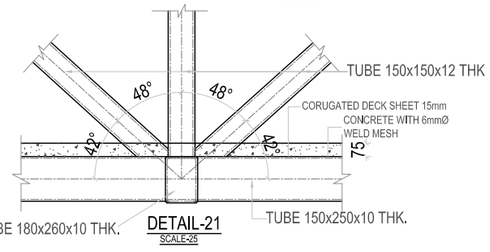

DETAIL-21
SCALE-25

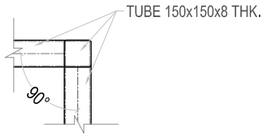

DETAIL-24
SCALE-25

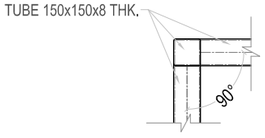

DETAIL-25
SCALE-25

NOTES:

1. ALL DIMENSIONS ARE IN MILLI METER. EXCEPT LEVELS, WHICH ARE IN METERS. DO NOT SCALE THE DRAWING. ONLY WRITEN DIMENSIONS ARE ARE TO BE FOLLOWED.
2. ALL STEEL FABRICATION SHALL BE AS PER IS 800.
3. ALL WELDS ARE FILLET WELD OF 6 MM SIZE UNLESS OTHERWISE SPECIFIED.
4. WELDING SHALL BE DONE AS PER IS 816 -69 FOR ARC WELDING.
5. ALL STRUCTURAL STEEL SHALL BE CONFIRMING TO IS 2062 .
6. ALL RCC WORKS SHALL CONFIRM TO IS 456-2000
7. CLEAR COVER TO MAIN REINFORCEMENT SHALL BE FOLLOWS:
   a) Footings = 50 mm b) Column = 40mm.
8. GRADE OF CONCRETE SHALL BE M25
9. `Y' DENOTES HYSD BARS (Fe 500)
10. 150kN/sq.m SBC IS CONSIDERED AT A DEPTH OF 1.5M BELOW EXISTING GROUND LEVEL.
11. For Foundation Details Refer Drawing: IS-1423-HIG-AL-SE-014

SI NO.	DESCRIPTION	REVISION.	BY	DATE
01	R6 drawings were proof checked by IIT-M	R7	IIT-M	17/12/2015
				11/08/2016

RELEASED FOR
- [ ] INFORMATION
- [ ] Draft D P R
- [ ] D P R
- [x] TENDER
- [ ] CONSTRUCTION

NOTES :

CLIENT :
CHENNAI METRO RAIL LIMITED
Admin Building, CMRL Depot, Poonamallee High Road, Koyambedu, Chennai -600107, Tamil Nadu, India.

CONSULTANT:
Infra Support
Your Complete Engineering Partner
INFRA SUPPORT ENGINEERING CONSULTANTS PVT. LTD.
An ISO 9001-2008 Certified Company
#934, 3rd Cross, HRBR Layout 1st Block
Kalyana nagar, Bangalore 560043, India
Phone: +91 80 25421364
corporate@infrasupport.in www.infrasupport.in

DESIGNED	AKK
DRAWN	PHG
CHECKED	RR
DATE	Nov - 2016
SHEET	2 of 22

PROJECT: ***Preparation of Feasibility Report & Detailed Project Report for Construction of Pedestrian Subways at Two Locations in Chennai for the Chennai Metropolitan Development Authority (CMDA)***

TITLE : Details of Longitudinal Section 1-1 of Foot Over Bridge at Alandur Metro Station

SCALE: NTS

DRG. NO. : IS - 1423 - HIG -AL - SE - 002

JOB NO. 1423

REVISION R7

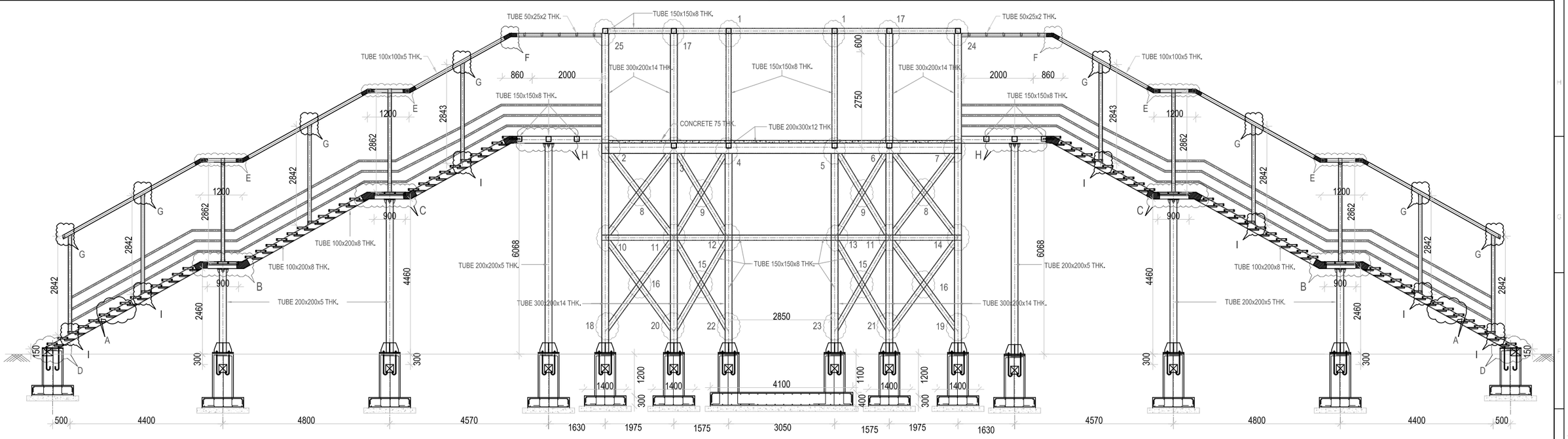

DETAILS OF STAIRCASE

SECTION 2 - 2

SCALE 1:100

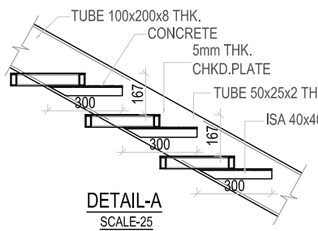

DETAIL-A

SCALE-25

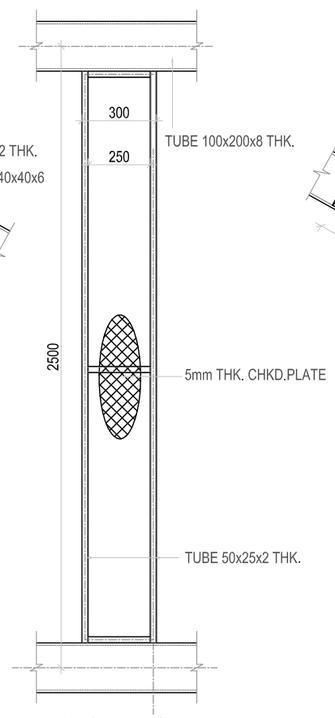

PLAN OF DETAIL-A

SCALE-25

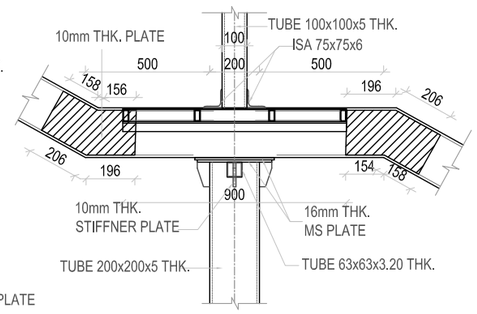

DETAIL-B

SCALE-25

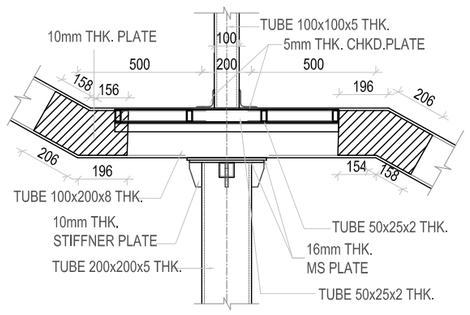

DETAIL-C

SCALE-25

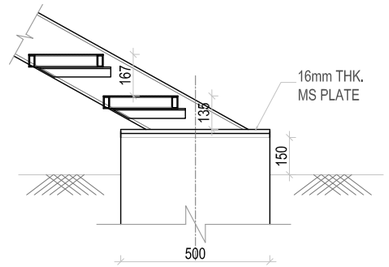

DETAIL-D

SCALE-25

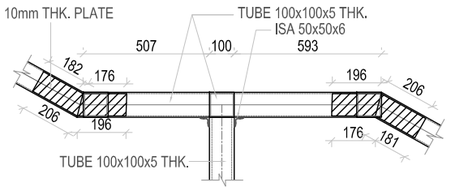

DETAIL-E

SCALE-25

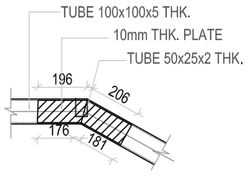

DETAIL-F

SCALE-25

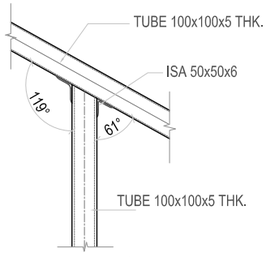

DETAIL-G

SCALE-25

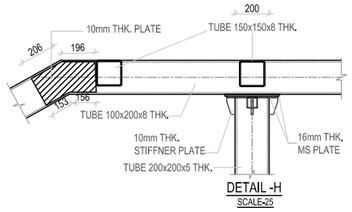

DETAIL -H

SCALE-25

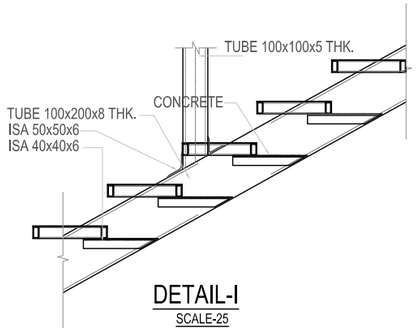

DETAIL-I

SCALE-25

NOTES:

1. ALL DIMENSIONS ARE IN MILLI METER. EXCEPT LEVELS, WHICH ARE IN METERS. DO NOT SCALE THE DRAWING. ONLY WRITEN DIMENSIONS ARE ARE TO BE FOLLOWED.
2. ALL STEEL FABRICATION SHALL BE AS PER IS 800.
3. ALL WELDS ARE FILLET WELD OF 6 MM SIZE UNLESS OTHERWISE SPECIFIED.
4. WELDING SHALL BE DONE AS PER IS 816 -69 FOR ARC WELDING.
5. ALL STRUCTURAL STEEL SHALL BE CONFIRMING TO IS 2062 .
6. ALL RCC WORKS SHALL CONFIRM TO IS 456-2000
7. CLEAR COVER TO MAIN REINFORCEMENT SHALL BE FOLLOWS:
   a) Footings = 50 mm b) Column = 40mm.
8. GRADE OF CONCRETE SHALL BE M25
9. `Y' DENOTES HYSD BARS (Fe 500)
10. 150kN/sq.m SBC IS CONSIDERED AT A DEPTH OF 1.5M BELOW EXISTING GROUND LEVEL.
11. For Foundation Details Refer Drawing: IS-1423-HIG-AL-SE-014

SI NO.	DESCRIPTION	REVISION.	BY	DATE
01	R6 drawings were proof checked by IIT-M	R7	IIT-M	17/12/2015
				11/08/2016

RELEASED FOR
- INFORMATION
- Draft D P R
- D P R
- TENDER
- CONSTRUCTION

NOTES :

CLIENT :

CHENNAI METRO RAIL LIMITED

Admin Building, CMRL Depot, Poonamallee High Road, Koyambedu, Chennai -600107, Tamil Nadu, India.

CONSULTANT:

Infra Support
Your Complete Engineering Partner

INFRA SUPPORT ENGINEERING CONSULTANTS PVT. LTD.

An ISO 9001-2008 Certified Company
#934, 3rd Cross, HRBR Layout 1st Block
Kalyana nagar, Bangalore 560043, India
Phone: +91 80 25421364
corporate@infrasupport.in www.infrasupport.in

DESIGNED	AKK
DRAWN	PHG
CHECKED	RR
DATE	Nov - 2016
SHEET	3 of 22

PROJECT: ***Preparation of Feasibility Report & Detailed Project Report for Construction of Pedestrian Subways at Two Locations in Chennai for the Chennai Metropolitan Development Authority (CMDA)***

TITLE : Details of Staircase Section 2-2 of Foot Over Bridge at Alandur Metro Station

SCALE: NTS

DRG. NO. : IS - 1423 - HIG -AL - SE - 003

JOB NO. 1423

REVISION R7

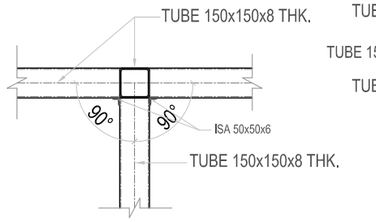

DETAIL - 1
SCALE-25

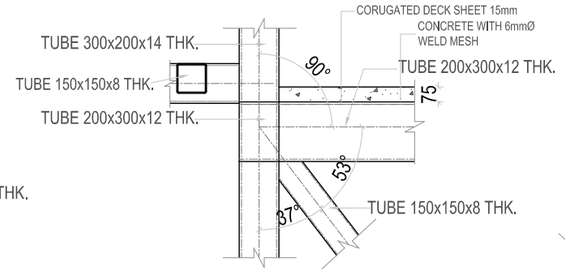

DETAIL - 2
SCALE-25

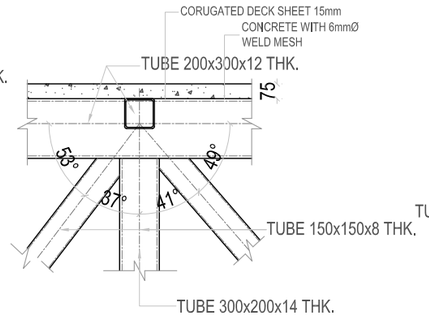

DETAIL - 3
SCALE-25

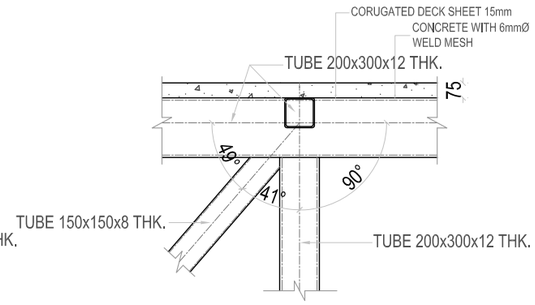

DETAIL - 4
SCALE-25

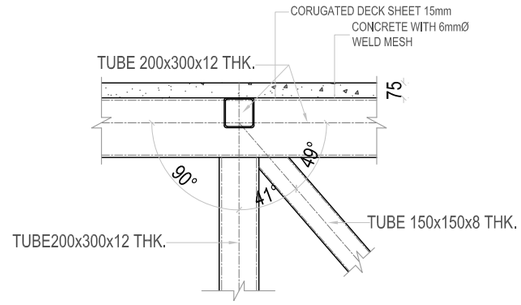

DETAIL - 5
SCALE-25

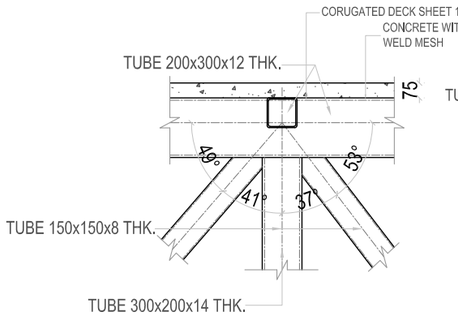

DETAIL - 6
SCALE-25

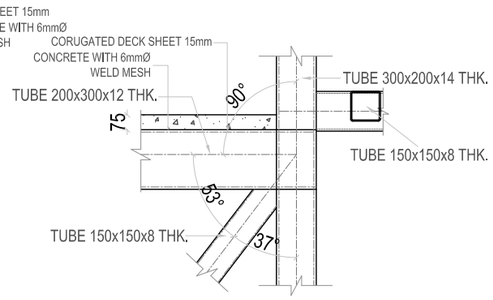

DETAIL - 7
SCALE-25

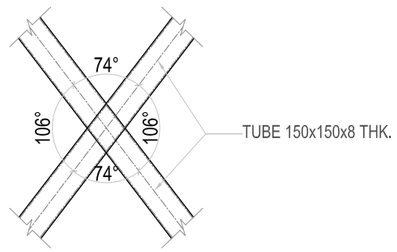

DETAIL - 8
SCALE-25

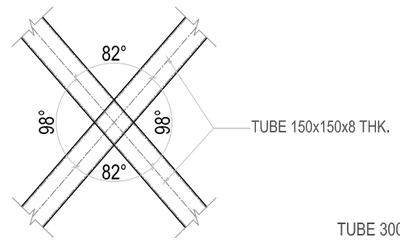

DETAIL - 9
SCALE-25

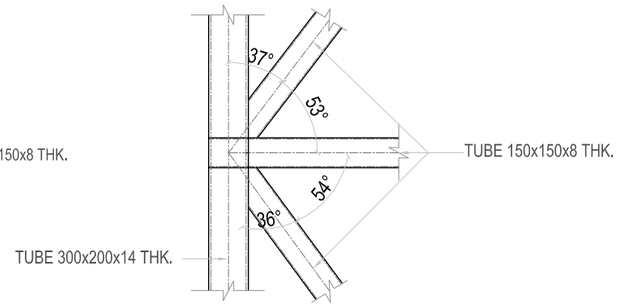

DETAIL - 10
SCALE-25

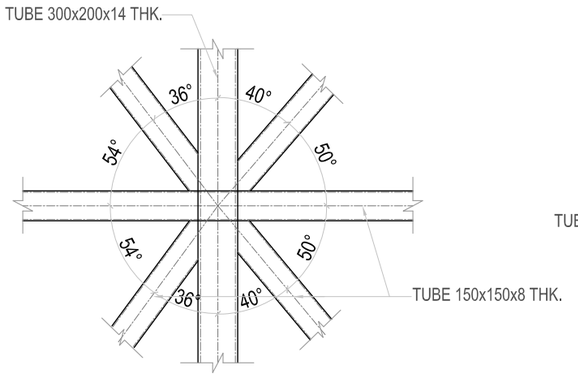

DETAIL - 11
SCALE-25

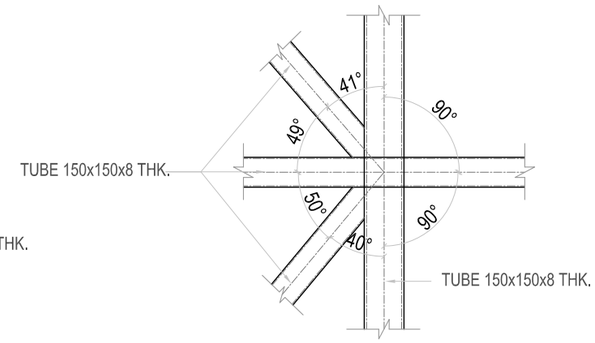

DETAIL - 12
SCALE-25

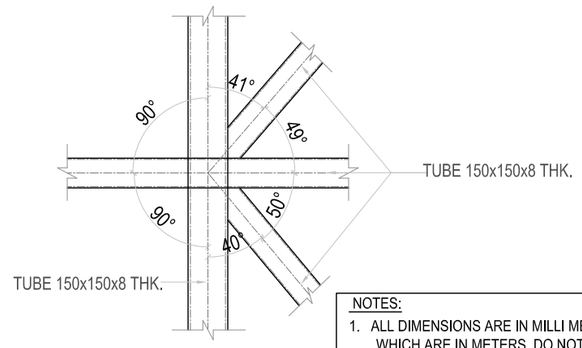

DETAIL - 13
SCALE-25

NOTES:

1. ALL DIMENSIONS ARE IN MILLI METER. EXCEPT LEVELS, WHICH ARE IN METERS. DO NOT SCALE THE DRAWING. ONLY WRITEN DIMENSIONS ARE ARE TO BE FOLLOWED.
2. ALL STEEL FABRICATION SHALL BE AS PER IS 800.
3. ALL WELDS ARE FILLET WELD OF 6 MM SIZE UNLESS OTHERWISE SPECIFIED.
4. WELDING SHALL BE DONE AS PER IS 816 -69 FOR ARC WELDING.
5. ALL STRUCTURAL STEEL SHALL BE CONFIRMING TO IS 2062 .
6. ALL RCC WORKS SHALL CONFIRM TO IS 456-2000
7. CLEAR COVER TO MAIN REINFORCEMENT SHALL BE FOLLOWS:
   a) Footings = 50 mm b) Column = 40mm.
8. GRADE OF CONCRETE SHALL BE M25
9. `Y' DENOTES HYSD BARS (Fe 500)
10. 150kN/sq.m SBC IS CONSIDERED AT A DEPTH OF 1.5M BELOW EXISTING GROUND LEVEL.
11. For Foundation Details Refer Drawing: IS-1423-HIG-AL-SE-014

SI NO.	DESCRIPTION	REVISION.	BY	DATE
01	R6 drawings were proof checked by IIT-M	R7	IIT-M	17/12/2015 11/08/2016

RELEASED FOR
- [ ] INFORMATION
- [ ] Draft D P R
- [ ] D P R
- [x] TENDER
- [ ] CONSTRUCTION

NOTES :

CLIENT :
CHENNAI METRO RAIL LIMITED
Admin Building, CMRL Depot, Poonamallee High Road, Koyambedu, Chennai -600107, Tamil Nadu, India.

CONSULTANT:
Infra Support
Your Complete Engineering Partner
INFRA SUPPORT ENGINEERING CONSULTANTS PVT. LTD.
An ISO 9001-2008 Certified Company
#934, 3rd Cross, HRBR Layout 1st Block
Kalyana nagar, Bangalore 560043, India
Phone: +91 80 25421364
corporate@infrasupport.in www.infrasupport.in

DESIGNED	AKK
DRAWN	PHG
CHECKED	RR
DATE	Nov - 2016
SHEET	4 of 22

PROJECT: ***Preparation of Feasibility Report & Detailed Project Report for Construction of Pedestrian Subways at Two Locations in Chennai for the Chennai Metropolitan Development Authority (CMDA)***

TITLE : Details of Staircase Section 2-2 of Foot Over Bridge at Alandur Metro Station

SCALE: NTS

DRG. NO. : IS - 1423 - HIG -AL - SE - 004

JOB NO. 1423

REVISION R7

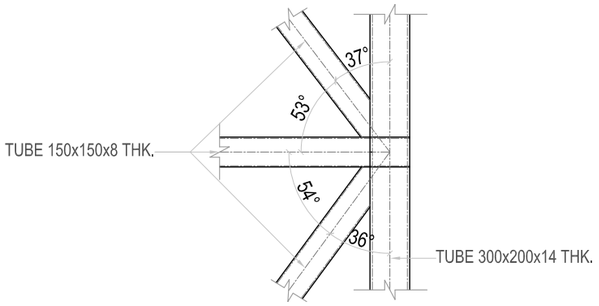

DETAIL - 14
SCALE-25

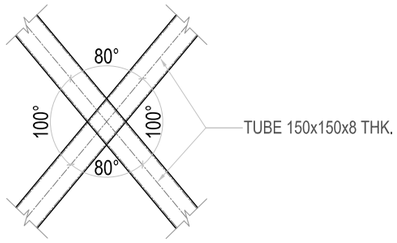

DETAIL - 15
SCALE-25

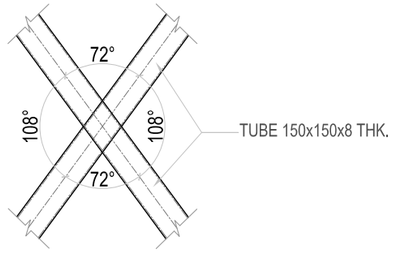

DETAIL - 16
SCALE-25

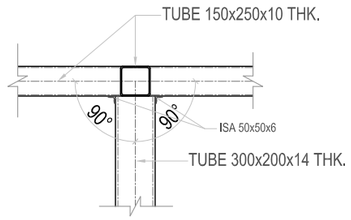

DETAIL - 17
SCALE-25

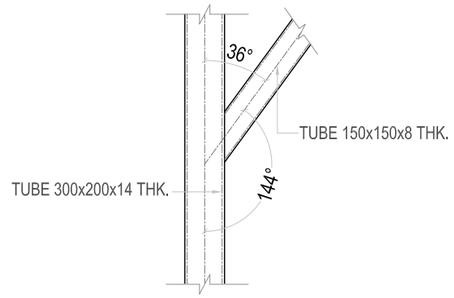

DETAIL - 18
SCALE-25

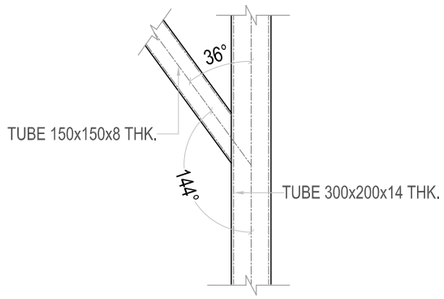

DETAIL - 19
SCALE-25

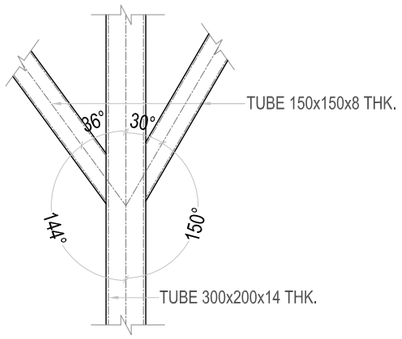

DETAIL - 20
SCALE-25

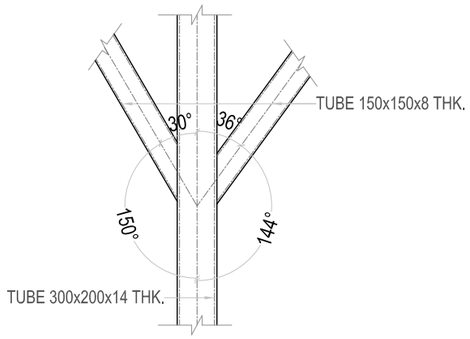

DETAIL - 21
SCALE-25

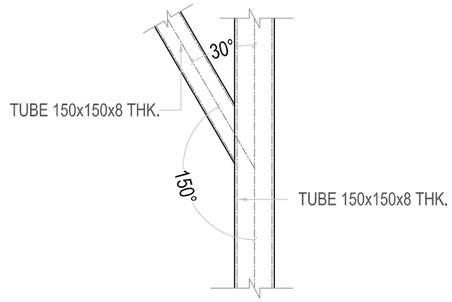

DETAIL - 22
SCALE-25

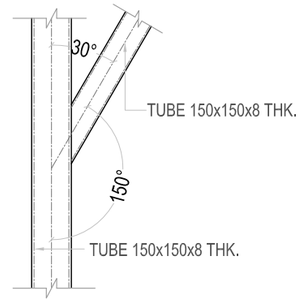

DETAIL - 23
SCALE-25

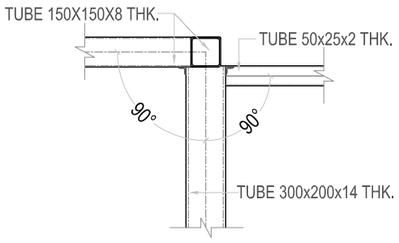

DETAIL - 24
SCALE-25

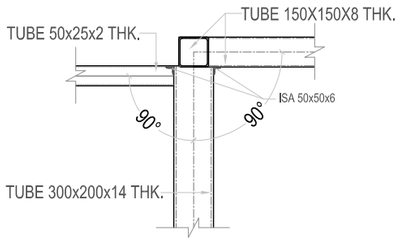

DETAIL - 25
SCALE-25

NOTES:

1. ALL DIMENSIONS ARE IN MILLI METER. EXCEPT LEVELS, WHICH ARE IN METERS. DO NOT SCALE THE DRAWING. ONLY WRITEN DIMENSIONS ARE ARE TO BE FOLLOWED.
2. ALL STEEL FABRICATION SHALL BE AS PER IS 800.
3. ALL WELDS ARE FILLET WELD OF 6 MM SIZE UNLESS OTHERWISE SPECIFIED.
4. WELDING SHALL BE DONE AS PER IS 816 -69 FOR ARC WELDING.
5. ALL STRUCTURAL STEEL SHALL BE CONFIRMING TO IS 2062 .
6. ALL RCC WORKS SHALL CONFIRM TO IS 456-2000
7. CLEAR COVER TO MAIN REINFORCEMENT SHALL BE FOLLOWS:
   a) Footings = 50 mm b) Column = 40mm.
8. GRADE OF CONCRETE SHALL BE M25
9. `Y' DENOTES HYSD BARS (Fe 500)
10. 150kN/sq.m SBC IS CONSIDERED AT A DEPTH OF 1.5M BELOW EXISTING GROUND LEVEL.
11. For Foundation Details Refer Drawing: IS-1423-HIG-AL-SE-014

SI NO.	DESCRIPTION	REVISION.	BY	DATE
01	R6 drawings were proof checked by IIT-M	R7	IIT-M	17/12/2015
				11/08/2016

RELEASED FOR
- [ ] INFORMATION
- [ ] Draft D P R
- [ ] D P R
- [x] TENDER
- [ ] CONSTRUCTION

NOTES :

CLIENT :
CHENNAI METRO RAIL LIMITED
Admin Building, CMRL Depot, Poonamallee High Road, Koyambedu, Chennai -600107, Tamil Nadu, India.

CONSULTANT:
Infra Support
Your Complete Engineering Partner
INFRA SUPPORT ENGINEERING CONSULTANTS PVT. LTD.
An ISO 9001-2008 Certified Company
#934, 3rd Cross, HRBR Layout 1st Block
Kalyana nagar, Bangalore 560043, India
Phone: +91 80 25421364
corporate@infrasupport.in www.infrasupport.in

DESIGNED	AKK
DRAWN	PHG
CHECKED	RR
DATE	Nov - 2016
SHEET	5 of 22

PROJECT: ***Preparation of Feasibility Report & Detailed Project Report for Construction of Pedestrian Subways at Two Locations in Chennai for the Chennai Metropolitan Development Authority (CMDA)***

TITLE : Details of Staircase Section 2-2 of Foot Over Bridge at Alandur Metro Station

SCALE: NTS

DRG. NO. : IS - 1423 - HIG -AL - SE - 005

JOB NO. 1423

REVISION R7

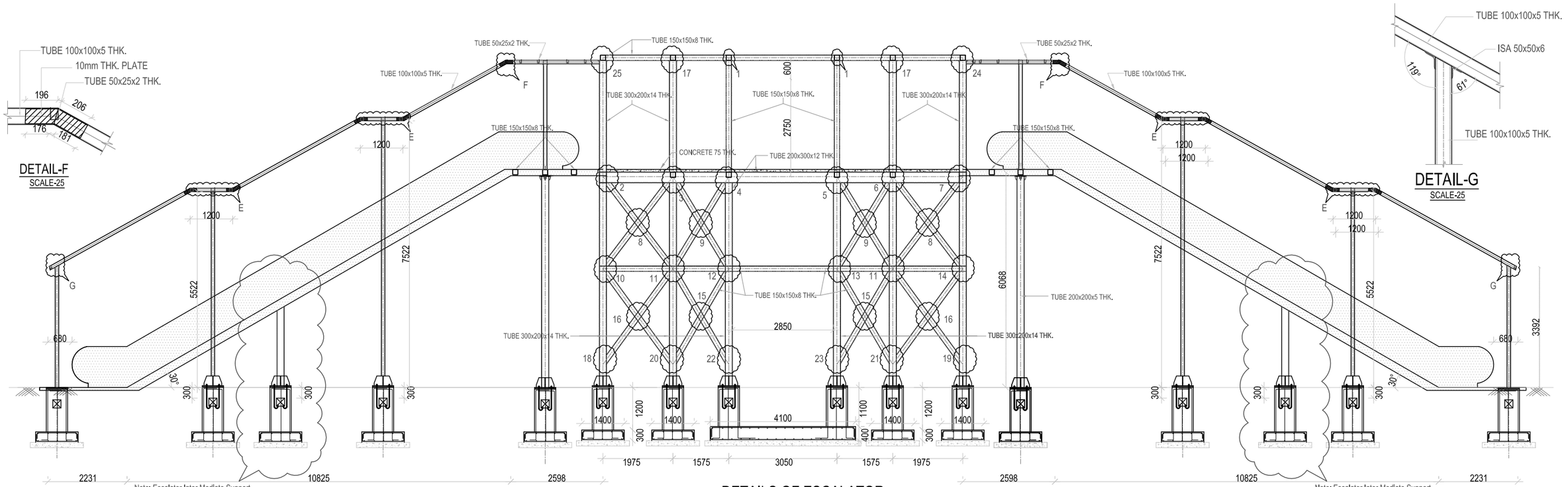

DETAILS OF ESCALATOR

SECTION 3 - 3

SCALE 1:100

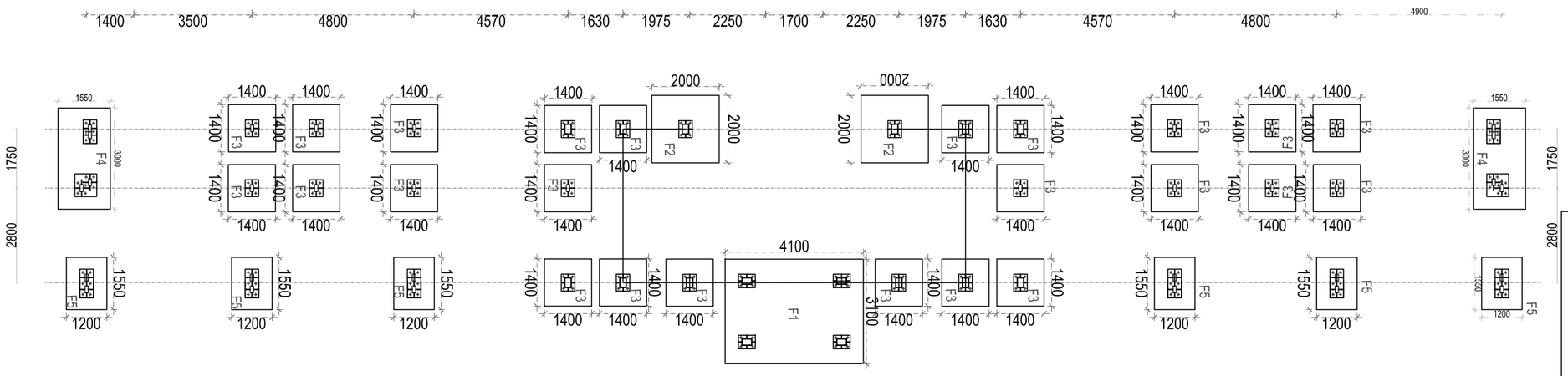

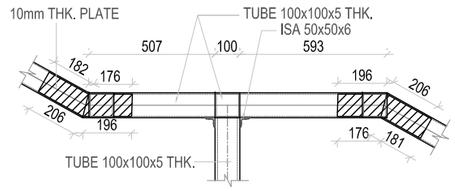

DETAIL-E

SCALE-25

NOTES:

1. ALL DIMENSIONS ARE IN MILLI METER. EXCEPT LEVELS, WHICH ARE IN METERS. DO NOT SCALE THE DRAWING. ONLY WRITEN DIMENSIONS ARE ARE TO BE FOLLOWED.
2. ALL STEEL FABRICATION SHALL BE AS PER IS 800.
3. ALL WELDS ARE FILLET WELD OF 6 MM SIZE UNLESS OTHERWISE SPECIFIED.
4. WELDING SHALL BE DONE AS PER IS 816 -69 FOR ARC WELDING.
5. ALL STRUCTURAL STEEL SHALL BE CONFIRMING TO IS 2062 .
6. ALL RCC WORKS SHALL CONFIRM TO IS 456-2000
7. CLEAR COVER TO MAIN REINFORCEMENT SHALL BE FOLLOWS:
   a) Footings = 50 mm b) Column = 40mm.
8. GRADE OF CONCRETE SHALL BE M25
9. `Y' DENOTES HYSD BARS (Fe 500)
10. 150kN/sq.m SBC IS CONSIDERED AT A DEPTH OF 1.5M BELOW EXISTING GROUND LEVEL.
11. For Foundation Details Refer Drawing: IS-1423-HIG-AL-SE-014

SI NO.	DESCRIPTION	REVISION.	BY	DATE
01	R6 drawings were proof checked by IIT-M	R7	IIT-M	17/12/2015 11/08/2016

RELEASED FOR
- INFORMATION
- Draft D P R
- D P R
- TENDER
- CONSTRUCTION

NOTES :

CLIENT :
CHENNAI METRO RAIL LIMITED
Admin Building, CMRL Depot, Poonamallee High Road, Koyambedu, Chennai -600107, Tamil Nadu, India.

CONSULTANT:
Infra Support
Your Complete Engineering Partner
INFRA SUPPORT ENGINEERING CONSULTANTS PVT. LTD.
An ISO 9001-2008 Certified Company
#934, 3rd Cross, HRBR Layout 1st Block
Kalyana nagar, Bangalore 560043, India
Phone: +91 80 25421364
corporate@infrasupport.in www.infrasupport.in

DESIGNED	AKK
DRAWN	PHG
CHECKED	RR
DATE	Nov - 2016
SHEET	6 of 22

PROJECT: ***Preparation of Feasibility Report & Detailed Project Report for Construction of Pedestrian Subways at Two Locations in Chennai for the Chennai Metropolitan Development Authority (CMDA)***

TITLE : Escalator, Side Elevation & Joint Details of Foot Over Bridge at Alandur Metro Station

JOB NO. 1423

REVISION R7

SCALE: NTS

DRG. NO. : IS - 1423 - HIG -AL - SE - 006

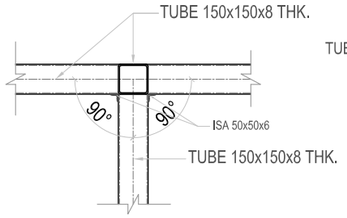

DETAIL - 1
SCALE-25

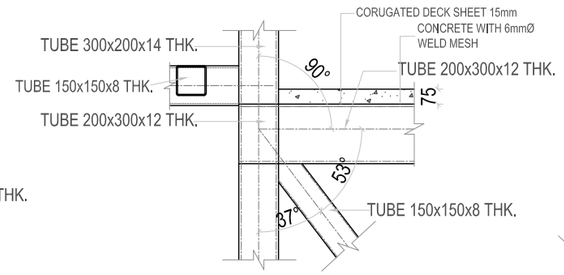

DETAIL - 2
SCALE-25

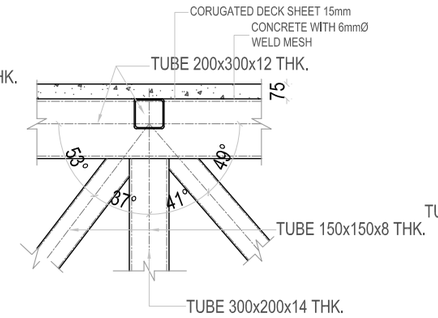

DETAIL - 3
SCALE-25

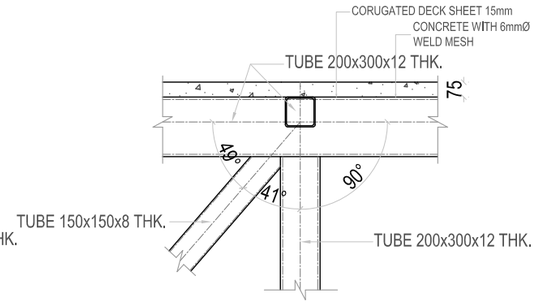

DETAIL - 4
SCALE-25

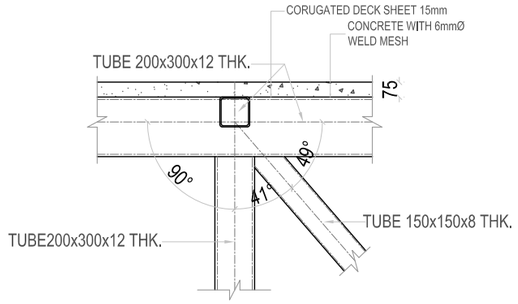

DETAIL - 5
SCALE-25

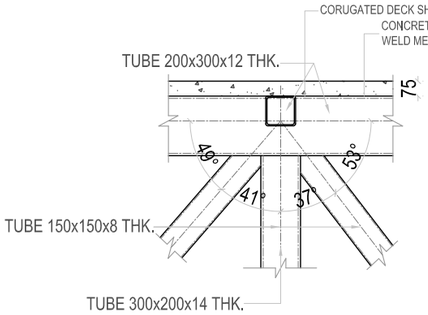

DETAIL - 6
SCALE-25

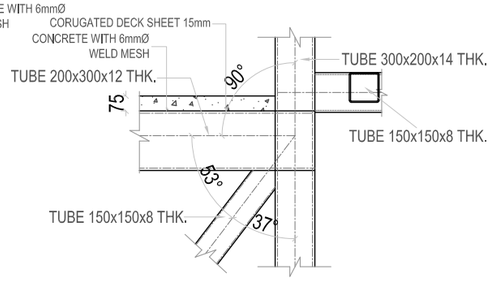

DETAIL - 7
SCALE-25

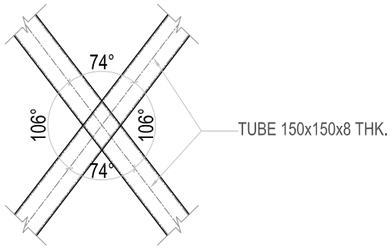

DETAIL - 8
SCALE-25

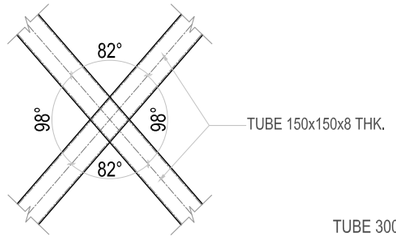

DETAIL - 9
SCALE-25

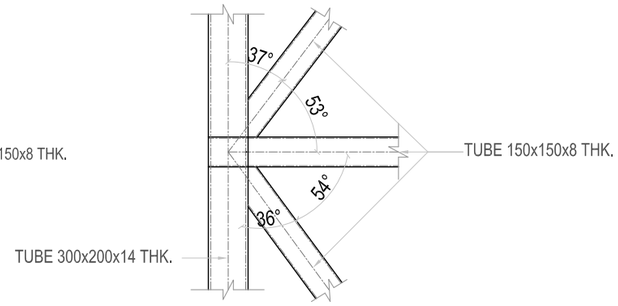

DETAIL - 10
SCALE-25

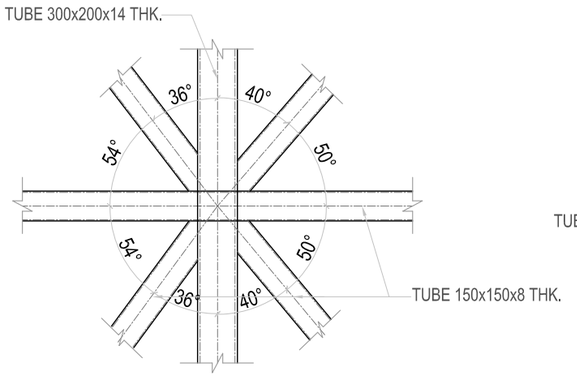

DETAIL - 11
SCALE-25

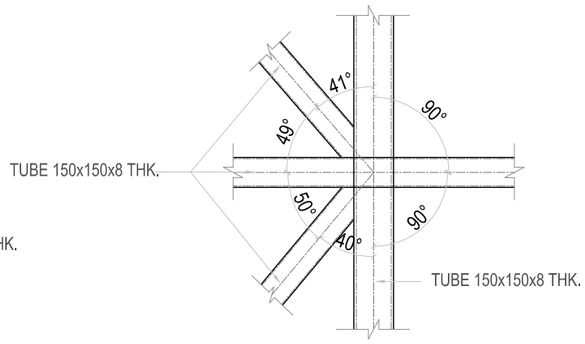

DETAIL - 12
SCALE-25

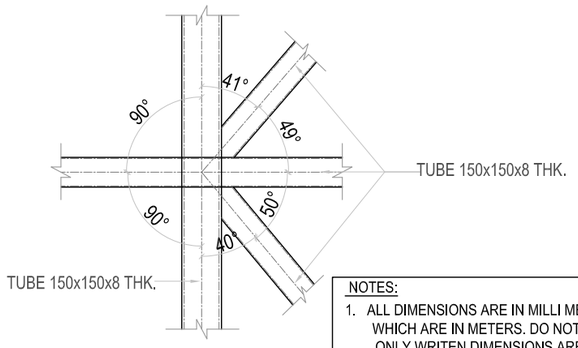

DETAIL - 13
SCALE-25

NOTES:

1. ALL DIMENSIONS ARE IN MILLI METER. EXCEPT LEVELS, WHICH ARE IN METERS. DO NOT SCALE THE DRAWING. ONLY WRITEN DIMENSIONS ARE ARE TO BE FOLLOWED.
2. ALL STEEL FABRICATION SHALL BE AS PER IS 800.
3. ALL WELDS ARE FILLET WELD OF 6 MM SIZE UNLESS OTHERWISE SPECIFIED.
4. WELDING SHALL BE DONE AS PER IS 816 -69 FOR ARC WELDING.
5. ALL STRUCTURAL STEEL SHALL BE CONFIRMING TO IS 2062 .
6. ALL RCC WORKS SHALL CONFIRM TO IS 456-2000
7. CLEAR COVER TO MAIN REINFORCEMENT SHALL BE FOLLOWS:
   a) Footings = 50 mm b) Column = 40mm.
8. GRADE OF CONCRETE SHALL BE M25
9. 'Y' DENOTES HYSD BARS (Fe 500)
10. 150kN/sq.m SBC IS CONSIDERED AT A DEPTH OF 1.5M BELOW EXISTING GROUND LEVEL.
11. For Foundation Details Refer Drawing: IS-1423-HIG-AL-SE-014

SI NO.	DESCRIPTION	REVISION.	BY	DATE
01	R6 drawings were proof checked by IIT-M	R7	IIT-M	17/12/2015 11/08/2016

RELEASED FOR
- [ ] INFORMATION
- [ ] Draft D P R
- [ ] D P R
- [x] TENDER
- [ ] CONSTRUCTION

NOTES :

CLIENT :
CHENNAI METRO RAIL LIMITED
Admin Building, CMRL Depot, Poonamallee High Road, Koyambedu, Chennai -600107, Tamil Nadu, India.

CONSULTANT:
Infra Support
Your Complete Engineering Partner
INFRA SUPPORT ENGINEERING CONSULTANTS PVT. LTD.
An ISO 9001-2008 Certified Company
#934, 3rd Cross, HRBR Layout 1st Block
Kalyana nagar, Bangalore 560043, India
Phone: +91 80 25421364
corporate@infrasupport.in www.infrasupport.in

DESIGNED	AKK
DRAWN	PHG
CHECKED	RR
DATE	Nov - 2016
SHEET	7 of 22

PROJECT: ***Preparation of Feasibility Report & Detailed Project Report for Construction of Pedestrian Subways at Two Locations in Chennai for the Chennai Metropolitan Development Authority (CMDA)***

TITLE : Escalator, Side Elevation & Joint Details of Foot Over Bridge at Alandur Metro Station

SCALE: NTS

DRG. NO. : IS - 1423 - HIG -AL - SE - 007

JOB NO. 1423

REVISION R7

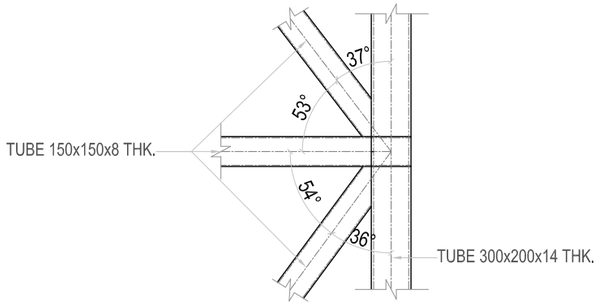

DETAIL - 14
SCALE-25

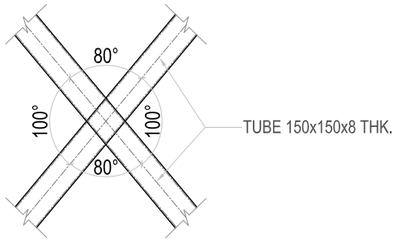

DETAIL - 15
SCALE-25

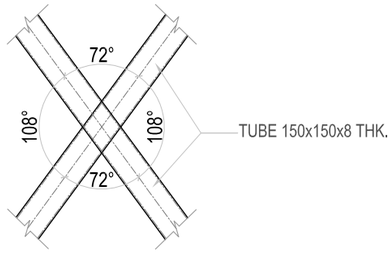

DETAIL - 16
SCALE-25

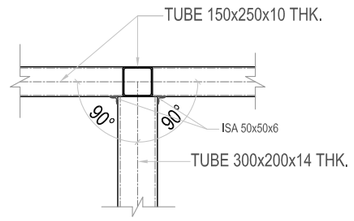

DETAIL - 17
SCALE-25

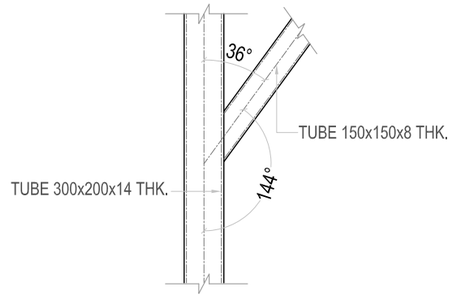

DETAIL - 18
SCALE-25

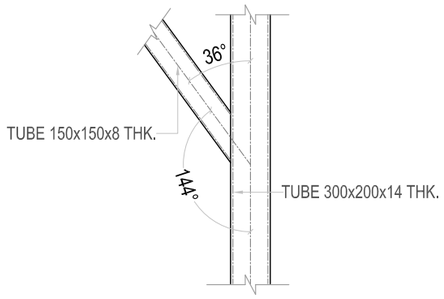

DETAIL - 19
SCALE-25

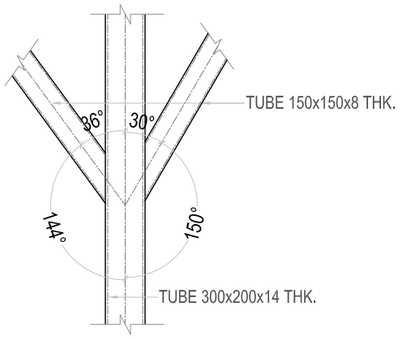

DETAIL - 20
SCALE-25

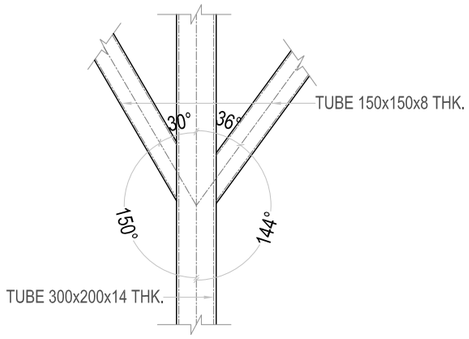

DETAIL - 21
SCALE-25

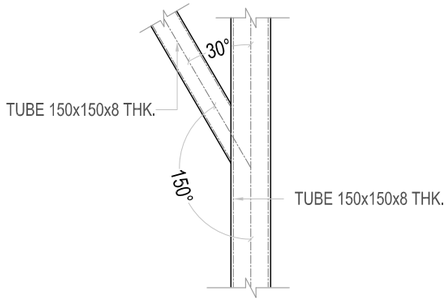

DETAIL - 22
SCALE-25

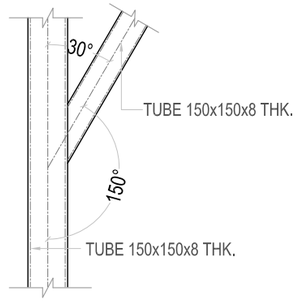

DETAIL - 23
SCALE-25

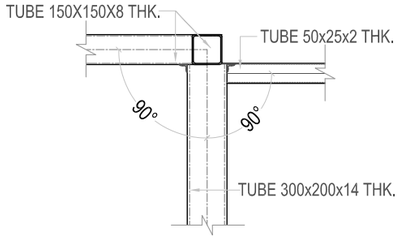

DETAIL - 24
SCALE-25

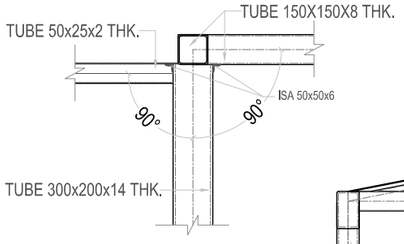

DETAIL - 25
SCALE-25

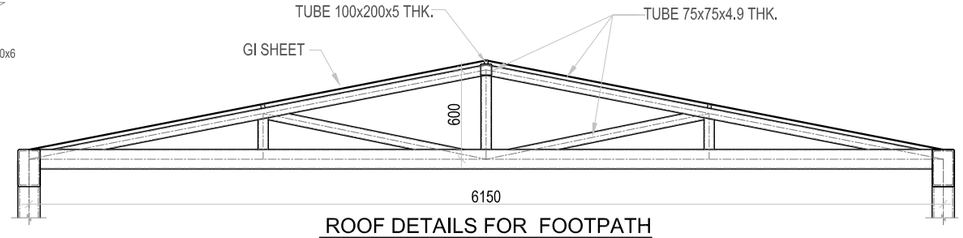

ROOF DETAILS FOR FOOTPATH
SCALE-50

NOTES:

1. ALL DIMENSIONS ARE IN MILLI METER. EXCEPT LEVELS, WHICH ARE IN METERS. DO NOT SCALE THE DRAWING. ONLY WRITEN DIMENSIONS ARE ARE TO BE FOLLOWED.
2. ALL STEEL FABRICATION SHALL BE AS PER IS 800.
3. ALL WELDS ARE FILLET WELD OF 6 MM SIZE UNLESS OTHERWISE SPECIFIED.
4. WELDING SHALL BE DONE AS PER IS 816 -69 FOR ARC WELDING.
5. ALL STRUCTURAL STEEL SHALL BE CONFIRMING TO IS 2062 .
6. ALL RCC WORKS SHALL CONFIRM TO IS 456-2000
7. CLEAR COVER TO MAIN REINFORCEMENT SHALL BE FOLLOWS:
   a) Footings = 50 mm b) Column = 40mm.
8. GRADE OF CONCRETE SHALL BE M25
9. `Y' DENOTES HYSD BARS (Fe 500)
10. 150kN/sq.m SBC IS CONSIDERED AT A DEPTH OF 1.5M BELOW EXISTING GROUND LEVEL.
11. For Foundation Details Refer Drawing: IS-1423-HIG-AL-SE-014

SI NO.	DESCRIPTION	REVISION.	BY	DATE
01	R6 drawings were proof checked by IIT-M	R7	IIT-M	17/12/2015 11/08/2016

RELEASED FOR
- [ ] INFORMATION
- [ ] Draft D P R
- [ ] D P R
- [x] TENDER
- [ ] CONSTRUCTION

NOTES :

CLIENT :
CHENNAI METRO RAIL LIMITED
Admin Building, CMRL Depot, Poonamallee High Road, Koyambedu, Chennai -600107, Tamil Nadu, India.

CONSULTANT:
Infra Support
Your Complete Engineering Partner
INFRA SUPPORT ENGINEERING CONSULTANTS PVT. LTD.
An ISO 9001-2008 Certified Company
#934, 3rd Cross, HRBR Layout 1st Block
Kalyana nagar, Bangalore 560043, India
Phone: +91 80 25421364
corporate@infrasupport.in www.infrasupport.in

DESIGNED	AKK	PROJECT:	***Preparation of Feasibility Report & Detailed Project Report for Construction of Pedestrian Subways at Two Locations in Chennai for the Chennai Metropolitan Development Authority (CMDA)***
DRAWN	PHG		
CHECKED	RR		
DATE	Nov - 2016	TITLE :	Escalator, Side Elevation & Joint Details of Foot Over Bridge at Alandur Metro Station
SHEET	8 of 22	SCALE:	NTS

DRG. NO. : IS - 1423 - HIG -AL - SE - 008

JOB NO. 1423

REVISION R7

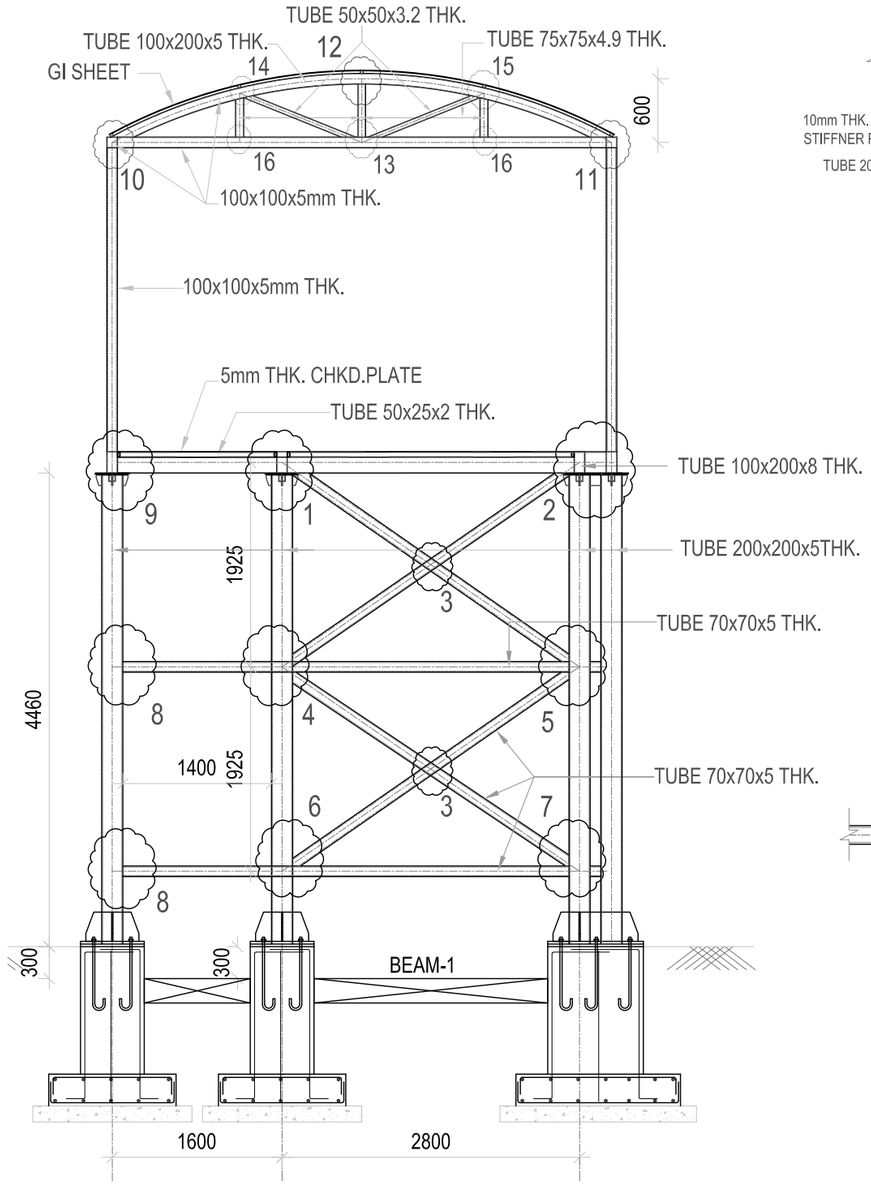

SIDE ELEVATION AT STAIRCASE

SECTION 4 - 4

SCALE 1:100

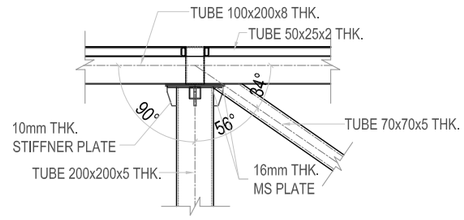

DETAIL-1
SCALE-25

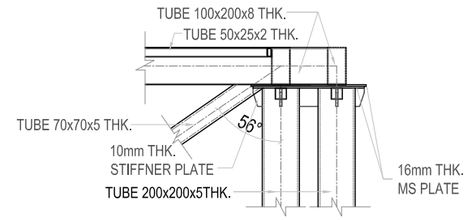

DETAIL-2
SCALE-25

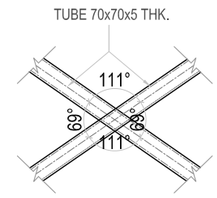

DETAIL-3
SCALE-25

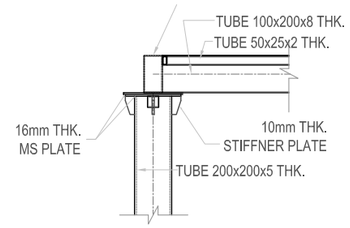

DETAIL-9
SCALE-25

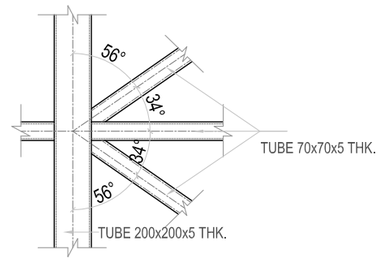

DETAIL-4
SCALE-25

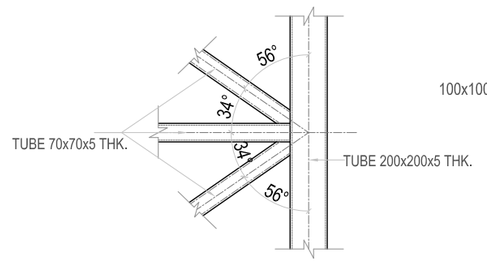

DETAIL-5
SCALE-25

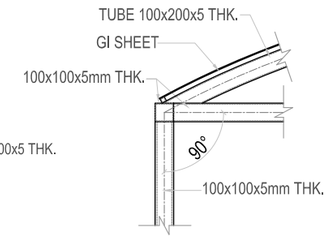

DETAIL - 10
SCALE-25

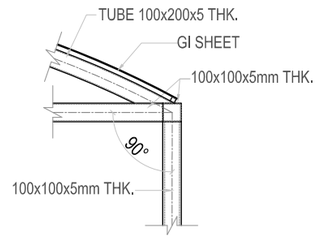

DETAIL - 11
SCALE-25

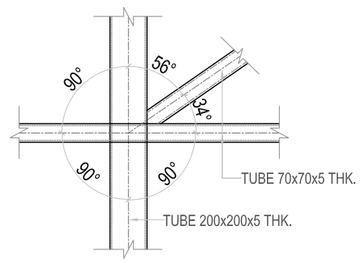

DETAIL-6
SCALE-25

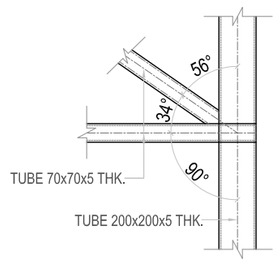

DETAIL-7
SCALE-25

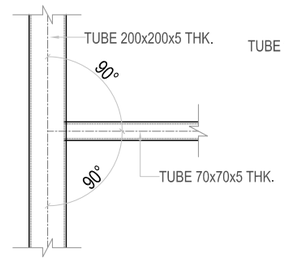

DETAIL-8
SCALE-25

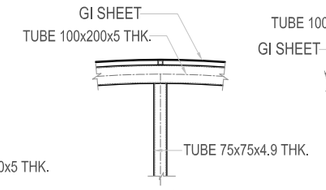

DETAIL-12
SCALE-25

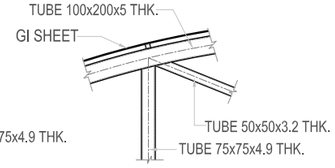

DETAIL-14
SCALE-25

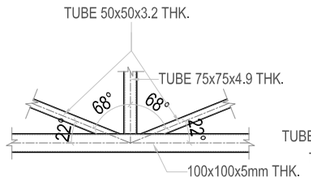

DETAIL-13
SCALE-25

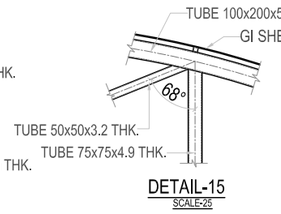

DETAIL-15
SCALE-25

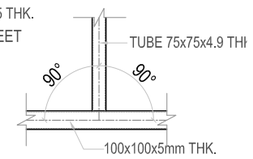

DETAIL-16
SCALE-25

NOTES:

1. ALL DIMENSIONS ARE IN MILLI METER. EXCEPT LEVELS, WHICH ARE IN METERS. DO NOT SCALE THE DRAWING. ONLY WRITEN DIMENSIONS ARE ARE TO BE FOLLOWED.
2. ALL STEEL FABRICATION SHALL BE AS PER IS 800.
3. ALL WELDS ARE FILLET WELD OF 6 MM SIZE UNLESS OTHERWISE SPECIFIED.
4. WELDING SHALL BE DONE AS PER IS 816 -69 FOR ARC WELDING.
5. ALL STRUCTURAL STEEL SHALL BE CONFIRMING TO IS 2062 .
6. ALL RCC WORKS SHALL CONFIRM TO IS 456-2000
7. CLEAR COVER TO MAIN REINFORCEMENT SHALL BE FOLLOWS:
   a) Footings = 50 mm b) Column = 40mm.
8. GRADE OF CONCRETE SHALL BE M25
9. `Y' DENOTES HYSD BARS (Fe 500)
10. 150kN/sq.m SBC IS CONSIDERED AT A DEPTH OF 1.5M BELOW EXISTING GROUND LEVEL.
11. For Foundation Details Refer Drawing: IS-1423-HIG-AL-SE-014

SI NO.	DESCRIPTION	REVISION.	BY	DATE
01	R6 drawings were proof checked by IIT-M	R7	IIT-M	17/12/2015 11/08/2016

RELEASED FOR
- INFORMATION
- Draft D P R
- D P R
- TENDER
- CONSTRUCTION

NOTES :

CLIENT :
CHENNAI METRO RAIL LIMITED
Admin Building, CMRL Depot, Poonamallee High Road, Koyambedu, Chennai -600107, Tamil Nadu, India.

CONSULTANT:
Infra Support
Your Complete Engineering Partner
INFRA SUPPORT ENGINEERING CONSULTANTS PVT. LTD.
An ISO 9001-2008 Certified Company
#934, 3rd Cross, HRBR Layout 1st Block
Kalyana nagar, Bangalore 560043, India
Phone: +91 80 25421364
corporate@infrasupport.in www.infrasupport.in

DESIGNED	AKK	PROJECT:	***Preparation of Feasibility Report & Detailed Project Report for Construction of Pedestrian Subways at Two Locations in Chennai for the Chennai Metropolitan Development Authority (CMDA)***
DRAWN	PHG		JOB NO. 1423
CHECKED	RR	TITLE :	Side Elevation Details of Foot Over Bridge at Alandur Metro Station
DATE	Nov - 2016		REVISION
SHEET	9 of 22	SCALE: NTS	DRG. NO.: IS - 1423 - HIG -AL - SE - 009 — R7

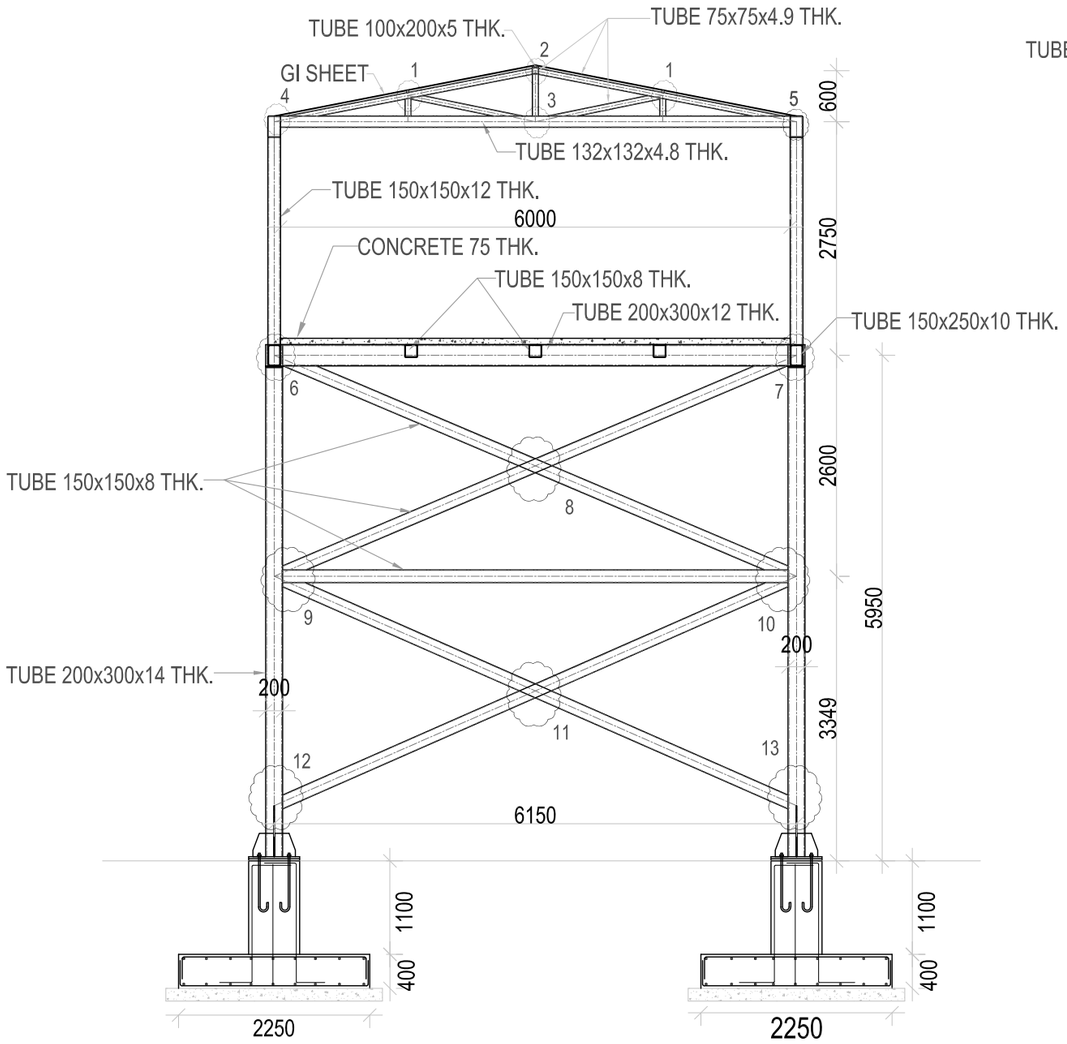

SIDE ELEVATION AT MEDIAN SUPPORT

SECTION 5 - 5

SCALE 1:100

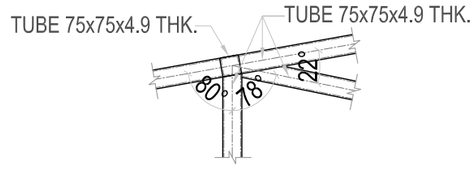

DETAIL - 1

SCALE-25

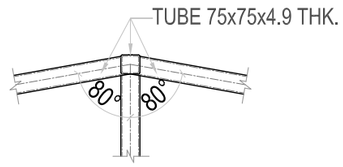

DETAIL - 2

SCALE-25

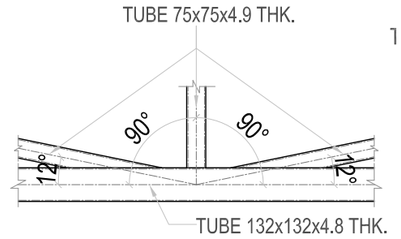

DETAIL - 3

SCALE-25

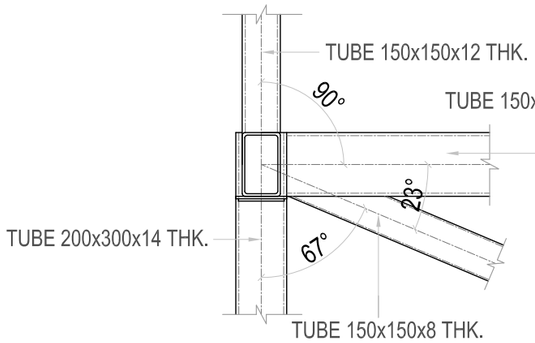

DETAIL - 6

SCALE-25

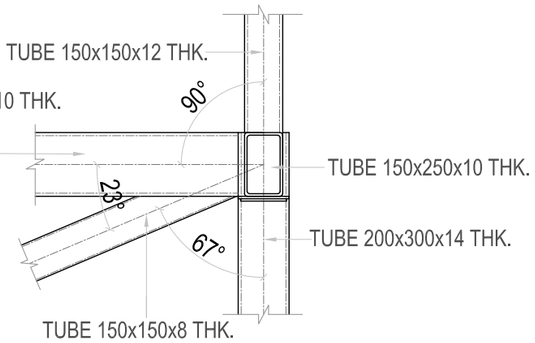

DETAIL - 7

SCALE-25

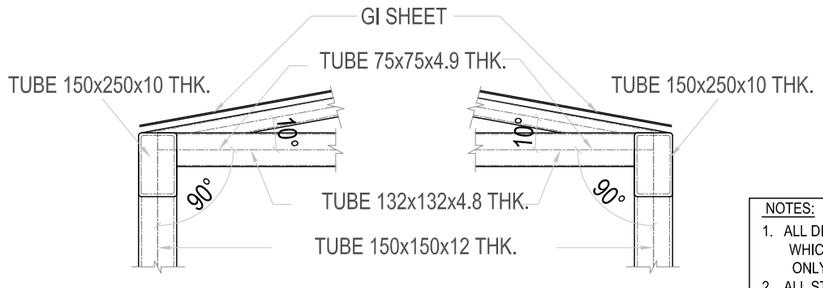

DETAIL - 4

SCALE-25

DETAIL - 5

SCALE-25

NOTES:

1. ALL DIMENSIONS ARE IN MILLI METER. EXCEPT LEVELS, WHICH ARE IN METERS. DO NOT SCALE THE DRAWING. ONLY WRITEN DIMENSIONS ARE ARE TO BE FOLLOWED.
2. ALL STEEL FABRICATION SHALL BE AS PER IS 800.
3. ALL WELDS ARE FILLET WELD OF 6 MM SIZE UNLESS OTHERWISE SPECIFIED.
4. WELDING SHALL BE DONE AS PER IS 816 -69 FOR ARC WELDING.
5. ALL STRUCTURAL STEEL SHALL BE CONFIRMING TO IS 2062 .
6. ALL RCC WORKS SHALL CONFIRM TO IS 456-2000
7. CLEAR COVER TO MAIN REINFORCEMENT SHALL BE FOLLOWS:
   a) Footings = 50 mm b) Column = 40mm.
8. GRADE OF CONCRETE SHALL BE M25
9. `Y' DENOTES HYSD BARS (Fe 500)
10. 150kN/sq.m SBC IS CONSIDERED AT A DEPTH OF 1.5M BELOW EXISTING GROUND LEVEL.
11. For Foundation Details Refer Drawing: IS-1423-HIG-AL-SE-014

SI NO.	DESCRIPTION	REVISION.	BY	DATE
01	R6 drawings were proof checked by IIT-M	R7	IIT-M	17/12/2015
				11/08/2016

RELEASED FOR
- [ ] INFORMATION
- [ ] Draft D P R
- [ ] D P R
- [x] TENDER
- [ ] CONSTRUCTION

NOTES :

CLIENT :
CHENNAI METRO RAIL LIMITED
Admin Building, CMRL Depot, Poonamallee High Road, Koyambedu, Chennai -600107, Tamil Nadu, India.

CONSULTANT:
Infra Support
Your Complete Engineering Partner
INFRA SUPPORT ENGINEERING CONSULTANTS PVT. LTD.
An ISO 9001-2008 Certified Company
#934, 3rd Cross, HRBR Layout 1st Block
Kalyana nagar, Bangalore 560043, India
Phone: +91 80 25421364
corporate@infrasupport.in www.infrasupport.in

DESIGNED	AKK	PROJECT:	***Preparation of Feasibility Report & Detailed Project Report for Construction of Pedestrian Subways at Two Locations in Chennai for the Chennai Metropolitan Development Authority (CMDA)***
DRAWN	PHG		JOB NO. 1423
CHECKED	RR	TITLE :	Elevation Details at Median Portion of Foot Over Bridge at Alandur Metro Station
DATE	Nov - 2016		REVISION
SHEET	10 of 22	SCALE: NTS	DRG. NO. : IS - 1423 - HIG -AL - SE - 010 — R7

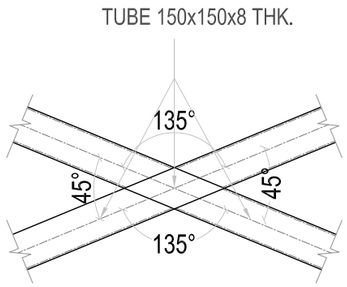

DETAIL - 8
SCALE-25

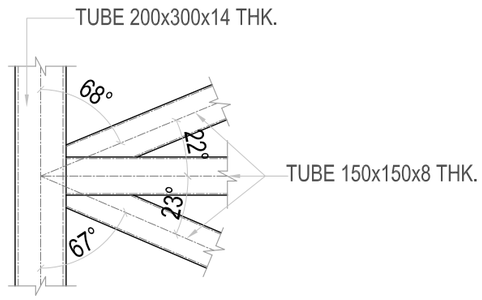

DETAIL - 9
SCALE-25

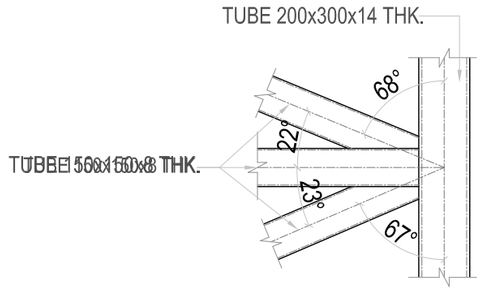

DETAIL - 10
SCALE-25

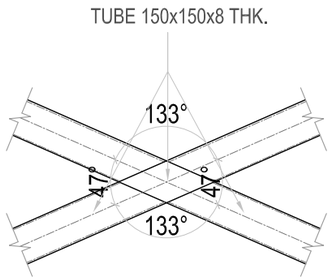

DETAIL - 11
SCALE-25

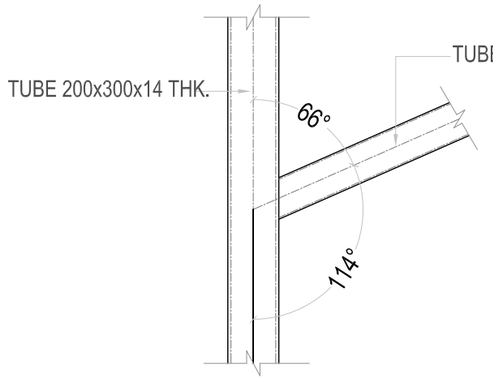

DETAIL - 12
SCALE-25

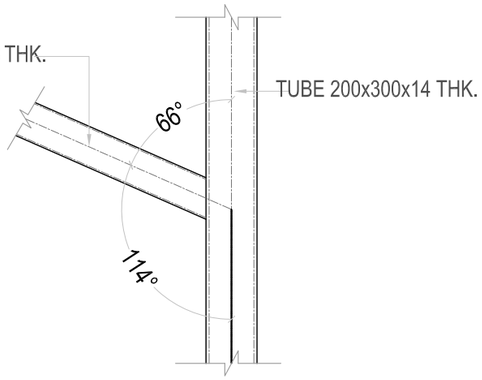

DETAIL - 13
SCALE-25

NOTES:

1. ALL DIMENSIONS ARE IN MILLI METER. EXCEPT LEVELS, WHICH ARE IN METERS. DO NOT SCALE THE DRAWING. ONLY WRITEN DIMENSIONS ARE ARE TO BE FOLLOWED.
2. ALL STEEL FABRICATION SHALL BE AS PER IS 800.
3. ALL WELDS ARE FILLET WELD OF 6 MM SIZE UNLESS OTHERWISE SPECIFIED.
4. WELDING SHALL BE DONE AS PER IS 816 -69 FOR ARC WELDING.
5. ALL STRUCTURAL STEEL SHALL BE CONFIRMING TO IS 2062 .
6. ALL RCC WORKS SHALL CONFIRM TO IS 456-2000
7. CLEAR COVER TO MAIN REINFORCEMENT SHALL BE FOLLOWS:
   a) Footings = 50 mm b) Column = 40mm.
8. GRADE OF CONCRETE SHALL BE M25
9. `Y' DENOTES HYSD BARS (Fe 500)
10. 150kN/sq.m SBC IS CONSIDERED AT A DEPTH OF 1.5M BELOW EXISTING GROUND LEVEL.
11. For Foundation Details Refer Drawing: IS-1423-HIG-AL-SE-014

SI NO.	DESCRIPTION	REVISION.	BY	DATE
01	R6 drawings were proof checked by IIT-M	R7	IIT-M	17/12/2015 11/08/2016

RELEASED FOR
- [ ] INFORMATION
- [ ] Draft D P R
- [ ] D P R
- [x] TENDER
- [ ] CONSTRUCTION

NOTES :

CLIENT :
CHENNAI METRO RAIL LIMITED
Admin Building, CMRL Depot, Poonamallee High Road, Koyambedu, Chennai -600107, Tamil Nadu, India.

CONSULTANT:
Infra Support
Your Complete Engineering Partner
INFRA SUPPORT ENGINEERING CONSULTANTS PVT. LTD.
An ISO 9001-2008 Certified Company
#934, 3rd Cross, HRBR Layout 1st Block
Kalyana nagar, Bangalore 560043, India
Phone: +91 80 25421364
corporate@infrasupport.in www.infrasupport.in

DESIGNED	AKK
DRAWN	PHG
CHECKED	RR
DATE	Nov - 2016
SHEET	11 of 22

PROJECT: ***Preparation of Feasibility Report & Detailed Project Report for Construction of Pedestrian Subways at Two Locations in Chennai for the Chennai Metropolitan Development Authority (CMDA)***

TITLE : Elevation Details at Median Portion of Foot Over Bridge at Alandur Metro Station

SCALE: NTS

DRG. NO. : IS - 1423 - HIG - AL - SE - 011

JOB NO. 1423

REVISION R7

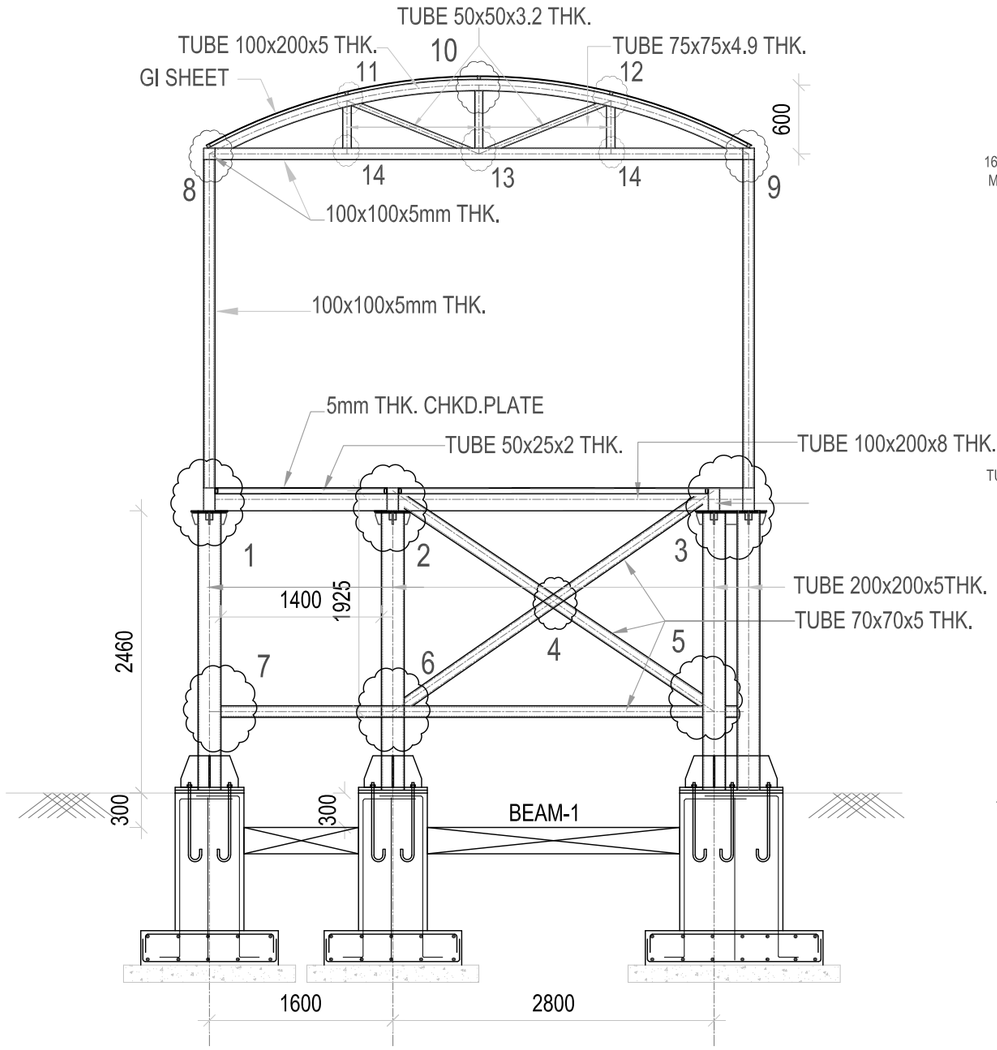

SIDE ELEVATION AT STAIRCASE

SECTION 6 - 6

SCALE 1:100

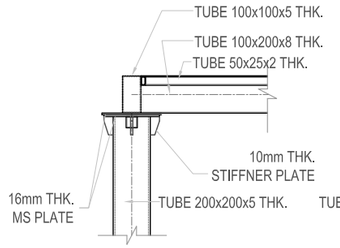

DETAIL-1
SCALE-25

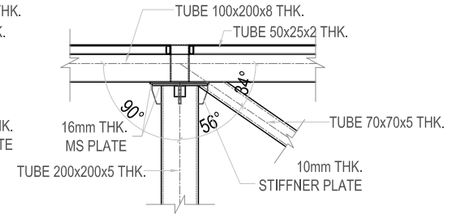

DETAIL-2
SCALE-25

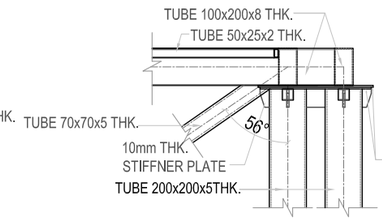

DETAIL-3
SCALE-25

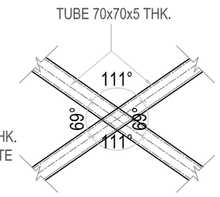

DETAIL-4
SCALE-25

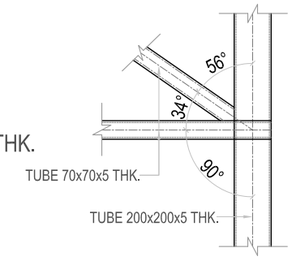

DETAIL-5
SCALE-25

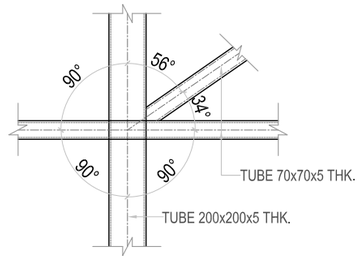

DETAIL-6
SCALE-25

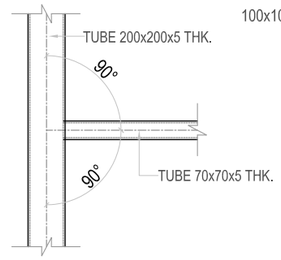

DETAIL-7
SCALE-25

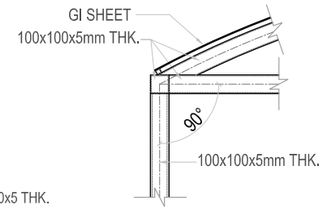

DETAIL - 8
SCALE-25

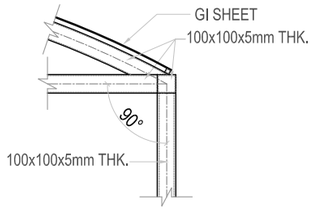

DETAIL - 9
SCALE-25

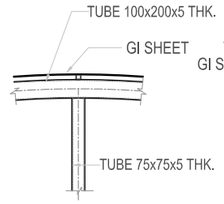

DETAIL-10
SCALE-25

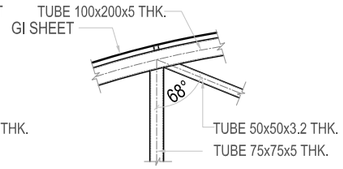

DETAIL-11
SCALE-25

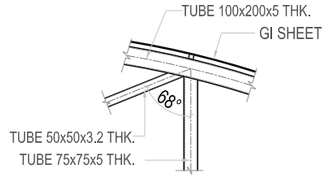

DETAIL-12
SCALE-25

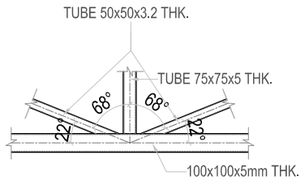

DETAIL-13
SCALE-25

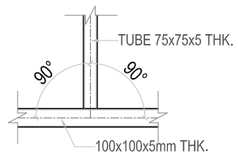

DETAIL-14
SCALE-25

NOTES:

1. ALL DIMENSIONS ARE IN MILLI METER. EXCEPT LEVELS, WHICH ARE IN METERS. DO NOT SCALE THE DRAWING. ONLY WRITEN DIMENSIONS ARE ARE TO BE FOLLOWED.
2. ALL STEEL FABRICATION SHALL BE AS PER IS 800.
3. ALL WELDS ARE FILLET WELD OF 6 MM SIZE UNLESS OTHERWISE SPECIFIED.
4. WELDING SHALL BE DONE AS PER IS 816 -69 FOR ARC WELDING.
5. ALL STRUCTURAL STEEL SHALL BE CONFIRMING TO IS 2062 .
6. ALL RCC WORKS SHALL CONFIRM TO IS 456-2000
7. CLEAR COVER TO MAIN REINFORCEMENT SHALL BE FOLLOWS:
   a) Footings = 50 mm b) Column = 40mm.
8. GRADE OF CONCRETE SHALL BE M25
9. `Y' DENOTES HYSD BARS (Fe 500)
10. 150kN/sq.m SBC IS CONSIDERED AT A DEPTH OF 1.5M BELOW EXISTING GROUND LEVEL.
11. For Foundation Details Refer Drawing: IS-1423-HIG-AL-SE-014

SI NO.	DESCRIPTION	REVISION.	BY	DATE
01	R6 drawings were proof checked by IIT-M	R7	IIT-M	17/12/2015
				11/08/2016

RELEASED FOR
- [ ] INFORMATION
- [ ] Draft D P R
- [ ] D P R
- [x] TENDER
- [ ] CONSTRUCTION

NOTES :

CLIENT :
CHENNAI METRO RAIL LIMITED
Admin Building, CMRL Depot, Poonamallee High Road, Koyambedu, Chennai -600107, Tamil Nadu, India.

CONSULTANT:
Infra Support
Your Complete Engineering Partner
INFRA SUPPORT ENGINEERING CONSULTANTS PVT. LTD.
An ISO 9001-2008 Certified Company
#934, 3rd Cross, HRBR Layout 1st Block
Kalyana nagar, Bangalore 560043, India
Phone: +91 80 25421364
corporate@infrasupport.in www.infrasupport.in

DESIGNED	AKK	PROJECT:	***Preparation of Feasibility Report & Detailed Project Report for Construction of Pedestrian Subways at Two Locations in Chennai for the Chennai Metropolitan Development Authority (CMDA)***
DRAWN	PHG		JOB NO. 1423
CHECKED	RR	TITLE :	Side Elevation Details of Foot Over Bridge at Alandur Metro Station
DATE	Nov - 2016		REVISION
SHEET	12 of 22	SCALE: NTS	DRG. NO. : IS - 1423 - HIG -AL - SE - 012 — R7

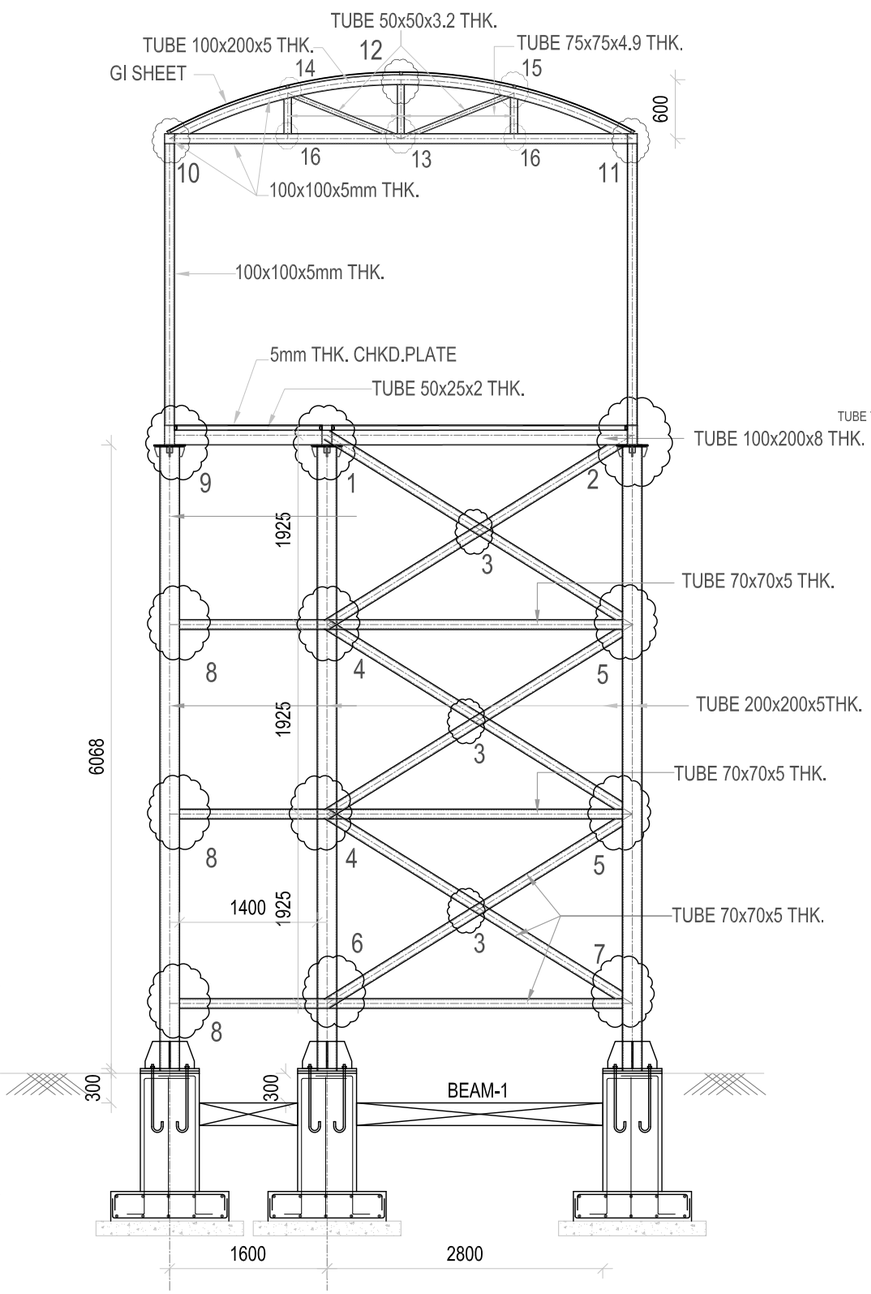

SIDE ELEVATION AT STAIRCASE

SECTION 7 - 7

SCALE 1:100

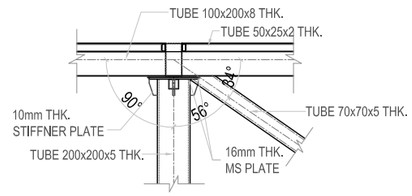

DETAIL-1
SCALE-25

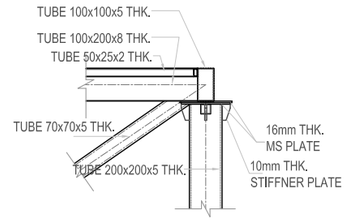

DETAIL-2
SCALE-25

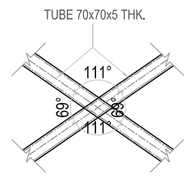

DETAIL-3
SCALE-25

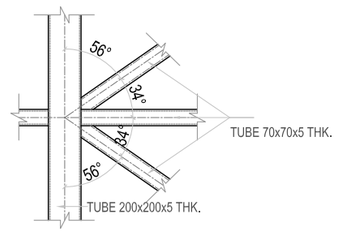

DETAIL-4
SCALE-25

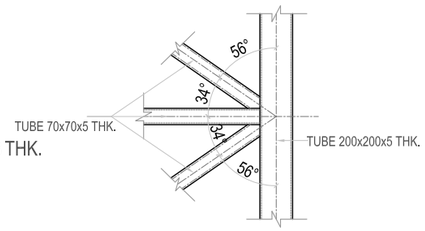

DETAIL-5
SCALE-25

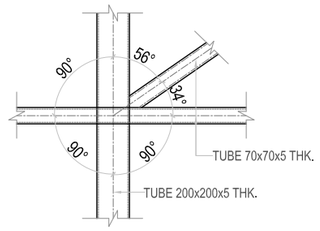

DETAIL-6
SCALE-25

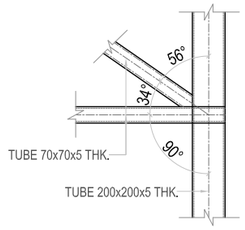

DETAIL-7
SCALE-25

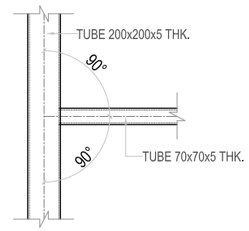

DETAIL-8
SCALE-25

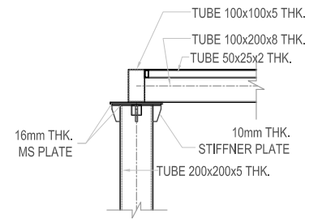

DETAIL-9
SCALE-25

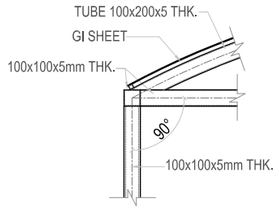

DETAIL - 10
SCALE-25

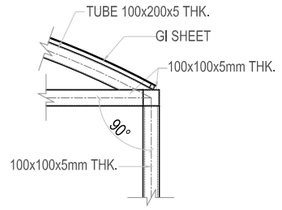

DETAIL - 11
SCALE-25

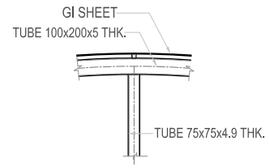

DETAIL-12
SCALE-25

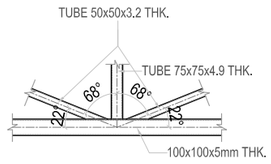

DETAIL-13
SCALE-25

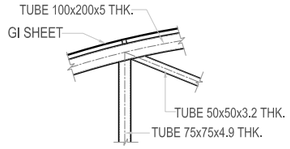

DETAIL-14
SCALE-25

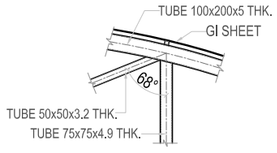

DETAIL-15
SCALE-25

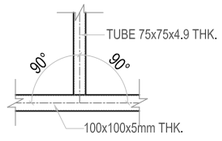

DETAIL-16
SCALE-25

NOTES:

1. ALL DIMENSIONS ARE IN MILLI METER. EXCEPT LEVELS, WHICH ARE IN METERS. DO NOT SCALE THE DRAWING. ONLY WRITEN DIMENSIONS ARE ARE TO BE FOLLOWED.
2. ALL STEEL FABRICATION SHALL BE AS PER IS 800.
3. ALL WELDS ARE FILLET WELD OF 6 MM SIZE UNLESS OTHERWISE SPECIFIED.
4. WELDING SHALL BE DONE AS PER IS 816 -69 FOR ARC WELDING.
5. ALL STRUCTURAL STEEL SHALL BE CONFIRMING TO IS 2062 .
6. ALL RCC WORKS SHALL CONFIRM TO IS 456-2000
7. CLEAR COVER TO MAIN REINFORCEMENT SHALL BE FOLLOWS:
   a) Footings = 50 mm b) Column = 40mm.
8. GRADE OF CONCRETE SHALL BE M25
9. `Y' DENOTES HYSD BARS (Fe 500)
10. 150kN/sq.m SBC IS CONSIDERED AT A DEPTH OF 1.5M BELOW EXISTING GROUND LEVEL.
11. For Foundation Details Refer Drawing: IS-1423-HIG-AL-SE-014

SI NO.	DESCRIPTION	REVISION.	BY	DATE
01	R6 drawings were proof checked by IIT-M	R7	IIT-M	17/12/2015
				11/08/2016

RELEASED FOR
- [ ] INFORMATION
- [ ] Draft D P R
- [ ] D P R
- [x] TENDER
- [ ] CONSTRUCTION

NOTES :

CLIENT :
CHENNAI METRO RAIL LIMITED
Admin Building, CMRL Depot, Poonamallee High Road, Koyambedu, Chennai -600107, Tamil Nadu, India.

CONSULTANT:
Infra Support
Your Complete Engineering Partner
INFRA SUPPORT ENGINEERING CONSULTANTS PVT. LTD.
An ISO 9001-2008 Certified Company
#934, 3rd Cross, HRBR Layout 1st Block
Kalyana nagar, Bangalore 560043, India
Phone: +91 80 25421364
corporate@infrasupport.in www.infrasupport.in

DESIGNED	AKK
DRAWN	PHG
CHECKED	RR
DATE	Nov - 2016
SHEET	13 of 22

PROJECT: ***Preparation of Feasibility Report & Detailed Project Report for Construction of Pedestrian Subways at Two Locations in Chennai for the Chennai Metropolitan Development Authority (CMDA)***

TITLE : Side Elevation Details of Foot Over Bridge at Alandur Metro Station

SCALE: NTS

DRG. NO. : IS - 1423 - HIG -AL - SE - 013

JOB NO. 1423

REVISION R7

TUBE SIZES

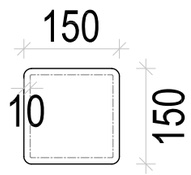

C/S OF 150x150x10 THK.

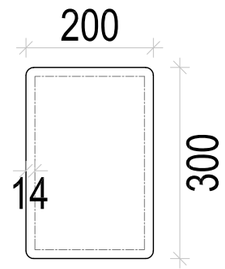

C/S OF 200x300x14 THK.

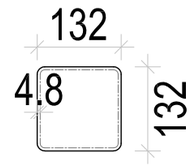

C/S OF 132x132x4.8 THK.

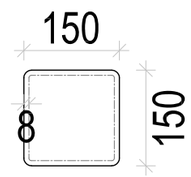

C/S OF 150x150x8 THK.

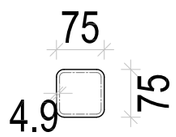

C/S OF 75X75X4.9 THK.

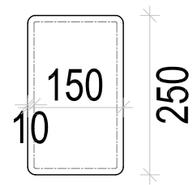

C/S OF 150x250x10 THK.

C/S OF 25x25x2 THK.

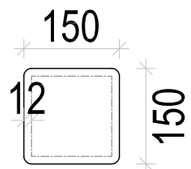

C/S OF 150x150x12 THK.

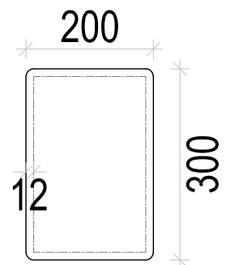

C/S OF 200x300x12 THK.

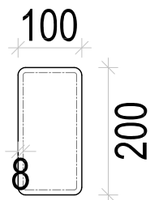

C/S OF 100x200x8 THK.

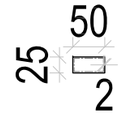

C/S OF 50x25x2 THK.

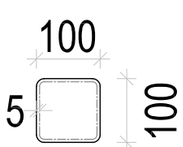

C/S OF 100x100x5 THK.

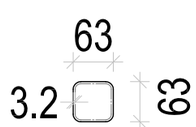

C/S OF 63x63x3.2 THK.

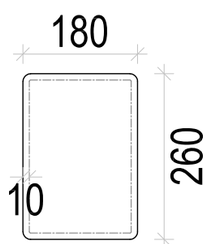

C/S OF 180x260x10 THK.

NOTES:

1. ALL DIMENSIONS ARE IN MILLI METER. EXCEPT LEVELS, WHICH ARE IN METERS. DO NOT SCALE THE DRAWING. ONLY WRITEN DIMENSIONS ARE ARE TO BE FOLLOWED.
2. ALL STEEL FABRICATION SHALL BE AS PER IS 800.
3. ALL WELDS ARE FILLET WELD OF 6 MM SIZE UNLESS OTHERWISE SPECIFIED.
4. WELDING SHALL BE DONE AS PER IS 816 -69 FOR ARC WELDING.
5. ALL STRUCTURAL STEEL SHALL BE CONFIRMING TO IS 2062 .
6. ALL RCC WORKS SHALL CONFIRM TO IS 456-2000
7. CLEAR COVER TO MAIN REINFORCEMENT SHALL BE FOLLOWS:
   a) Footings = 50 mm b) Column = 40mm.
8. GRADE OF CONCRETE SHALL BE M25
9. `Y' DENOTES HYSD BARS (Fe 500)
10. 150kN/sq.m SBC IS CONSIDERED AT A DEPTH OF 1.5M BELOW EXISTING GROUND LEVEL.

SI NO.	DESCRIPTION	REVISION.	BY	DATE
01	R6 drawings were proof checked by IIT-M	R7	IIT-M	17/12/2015
				11/08/2016

RELEASED FOR
- INFORMATION
- Draft D P R
- D P R
- TENDER
- CONSTRUCTION

NOTES :

CLIENT :
CHENNAI METRO RAIL LIMITED
Admin Building, CMRL Depot, Poonamallee High Road, Koyambedu, Chennai -600107, Tamil Nadu, India.

CONSULTANT:
Infra Support
Your Complete Engineering Partner
INFRA SUPPORT ENGINEERING CONSULTANTS PVT. LTD.
An ISO 9001-2008 Certified Company
#934, 3rd Cross, HRBR Layout 1st Block
Kalyana nagar, Bangalore 560043, India
Phone: +91 80 25421364
corporate@infrasupport.in www.infrasupport.in

DESIGNED	AKK
DRAWN	PHG
CHECKED	RR
DATE	Nov - 2016
SHEET	14 of 22

PROJECT: ***Preparation of Feasibility Report & Detailed Project Report for Construction of Pedestrian Subways at Two Locations in Chennai for the Chennai Metropolitan Development Authority (CMDA)***

TITLE : Tube Details of Foot Over Bridge at Alandur Metro Station

SCALE: NTS

DRG. NO. : IS - 1423 - HIG -AL - SE - 014

JOB NO. 1423

REVISION R7

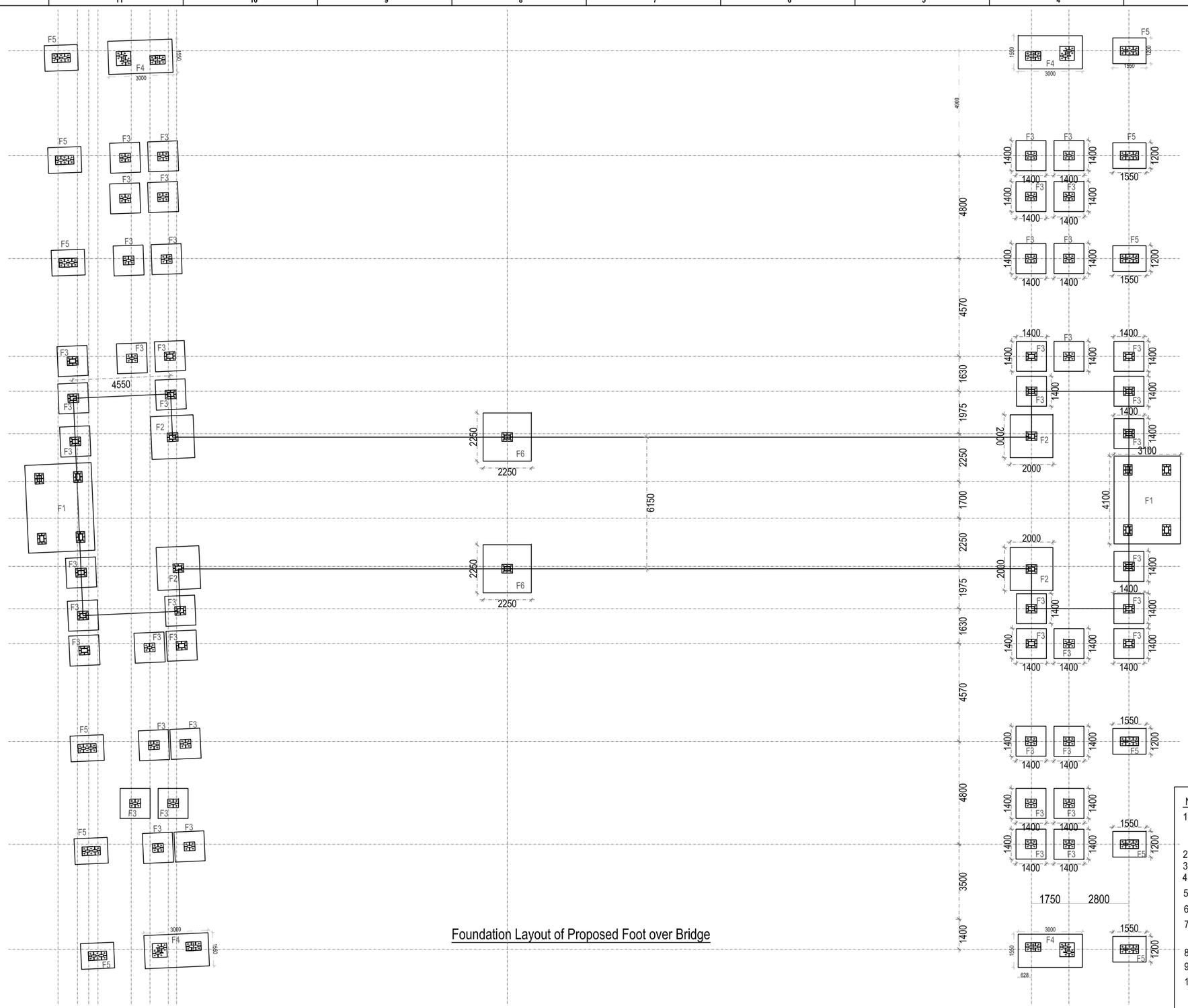

Foundation Layout of Proposed Foot over Bridge

NOTES:

1. ALL DIMENSIONS ARE IN MILLI METER. EXCEPT LEVELS, WHICH ARE IN METERS. DO NOT SCALE THE DRAWING. ONLY WRITEN DIMENSIONS ARE ARE TO BE FOLLOWED.
2. ALL STEEL FABRICATION SHALL BE AS PER IS 800.
3. ALL WELDS ARE FILLET WELD OF 6 MM SIZE UNLESS OTHERWISE SPECIFIED.
4. WELDING SHALL BE DONE AS PER IS 816 -69 FOR ARC WELDING.
5. ALL STRUCTURAL STEEL SHALL BE CONFIRMING TO IS 2062 .
6. ALL RCC WORKS SHALL CONFIRM TO IS 456-2000
7. CLEAR COVER TO MAIN REINFORCEMENT SHALL BE FOLLOWS:
   a) Footings = 50 mm b) Column = 40mm.
8. GRADE OF CONCRETE SHALL BE M25
9. `Y' DENOTES HYSD BARS (Fe 500)
10. 150kN/sq.m SBC IS CONSIDERED AT A DEPTH OF 1.5M BELOW EXISTING GROUND LEVEL.

SI NO.	DESCRIPTION	REVISION.	BY	DATE
01	R6 drawings were proof checked by IIT-M	R7	IIT-M	17/12/2015 11/08/2016

RELEASED FOR
- [ ] INFORMATION
- [ ] Draft D P R
- [ ] D P R
- [x] TENDER
- [ ] CONSTRUCTION

NOTES :

CLIENT :
CHENNAI METRO RAIL LIMITED
Admin Building, CMRL Depot, Poonamallee High Road, Koyambedu, Chennai -600107, Tamil Nadu, India.

CONSULTANT:
Infra Support
Your Complete Engineering Partner
INFRA SUPPORT ENGINEERING CONSULTANTS PVT. LTD.
An ISO 9001-2008 Certified Company
#934, 3rd Cross, HRBR Layout 1st Block
Kalyana nagar, Bangalore 560043, India
Phone: +91 80 25421364
corporate@infrasupport.in www.infrasupport.in

DESIGNED	AKK
DRAWN	PHG
CHECKED	RR
DATE	Nov - 2016
SHEET	15 of 22

PROJECT: ***Preparation of Feasibility Report & Detailed Project Report for Construction of Pedestrian Subways at Two Locations in Chennai for the Chennai Metropolitan Development Authority (CMDA)***

TITLE : Foundation Layout of Foot Over Bridge at Alandur Metro Station

SCALE: NTS

DRG. NO. : IS - 1423 - HIG -AL - SE - 015

JOB NO. 1423

REVISION R7

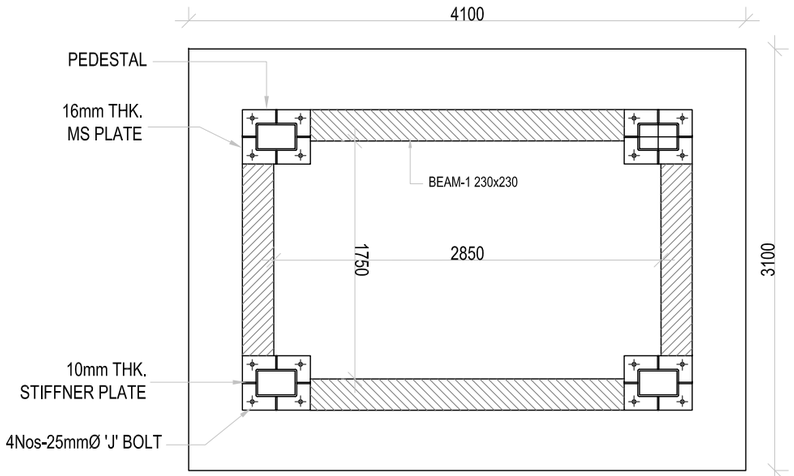

PLAN
SCALE-50

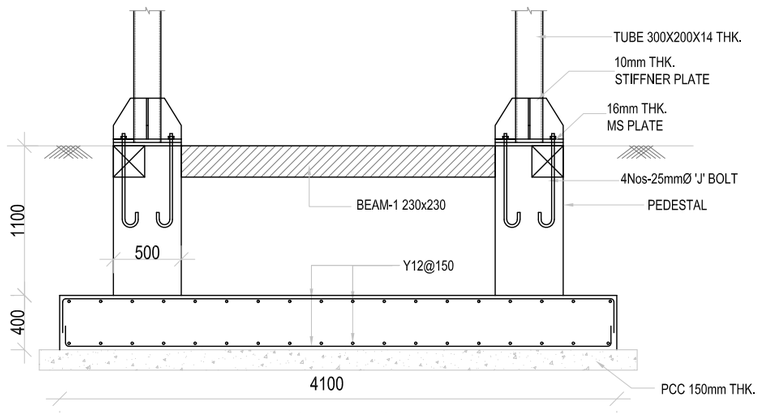

FOOTING DETAILS (F1)
SCALE-1:50

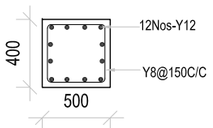

PEDESTAL RC DETAILS
SCALE-1:50

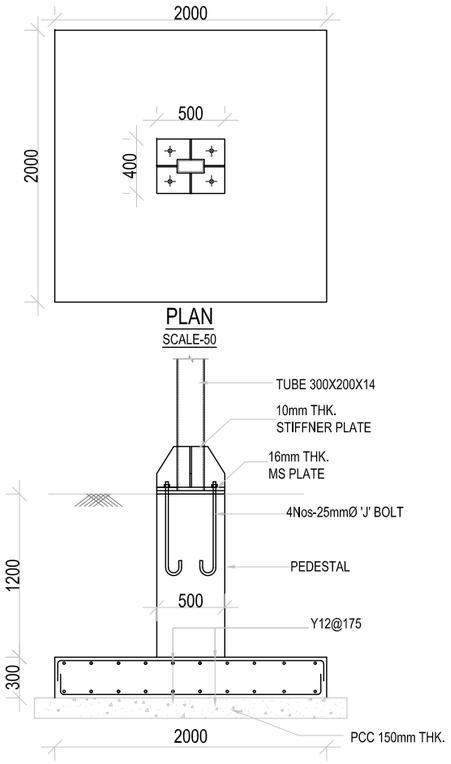

PLAN
SCALE-50

FOOTING DETAILS (F2)
SCALE-1:50

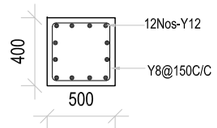

PEDESTAL RC DETAILS
SCALE-1:50

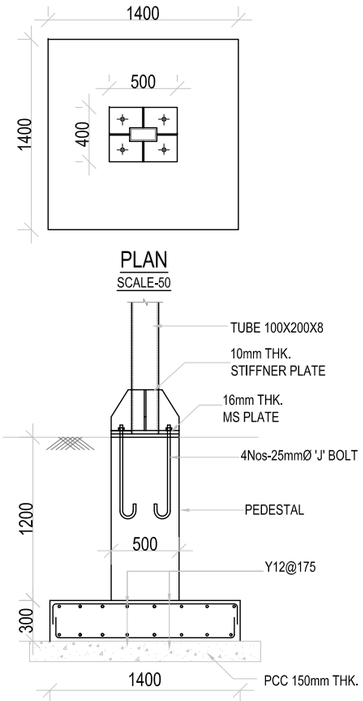

PLAN
SCALE-50

FOOTING DETAILS (F3)
SCALE-1:50

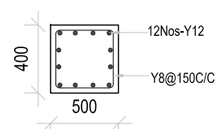

PEDESTAL RC DETAILS
SCALE-1:50

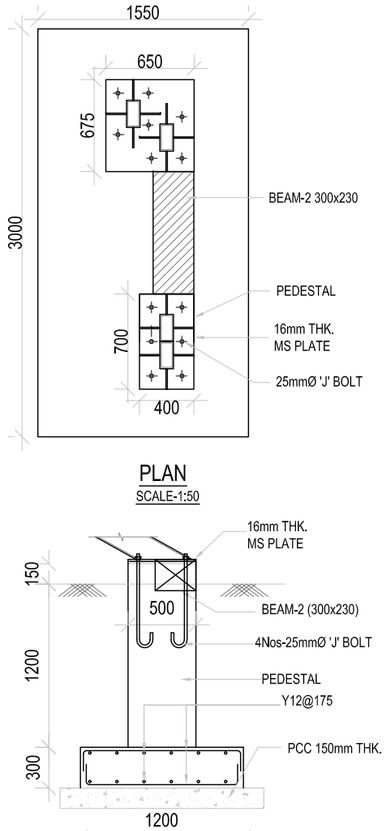

PLAN
SCALE-1:50

FOOTING DETAILS (F4)
SCALE-50

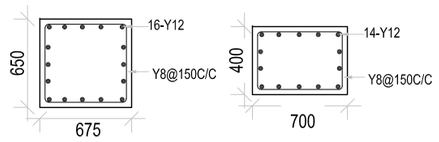

PEDESTAL RC DETAILS
SCALE-1:50

NOTES:

1. ALL DIMENSIONS ARE IN MILLI METER. EXCEPT LEVELS, WHICH ARE IN METERS. DO NOT SCALE THE DRAWING. ONLY WRITEN DIMENSIONS ARE ARE TO BE FOLLOWED.
2. ALL STEEL FABRICATION SHALL BE AS PER IS 800.
3. ALL WELDS ARE FILLET WELD OF 6 MM SIZE UNLESS OTHERWISE SPECIFIED.
4. WELDING SHALL BE DONE AS PER IS 816 -69 FOR ARC WELDING.
5. ALL STRUCTURAL STEEL SHALL BE CONFIRMING TO IS 2062 .
6. ALL RCC WORKS SHALL CONFIRM TO IS 456-2000
7. CLEAR COVER TO MAIN REINFORCEMENT SHALL BE FOLLOWS:
   a) Footings = 50 mm b) Column = 40mm.
8. GRADE OF CONCRETE SHALL BE M25
9. `Y' DENOTES HYSD BARS (Fe 500)
10. 150kN/sq.m SBC IS CONSIDERED AT A DEPTH OF 1.5M BELOW EXISTING GROUND LEVEL.

SI NO.	DESCRIPTION	REVISION.	BY	DATE
01	R6 drawings were proof checked by IIT-M	R7	IIT-M	17/12/2015 11/08/2016

RELEASED FOR
- INFORMATION
- Draft D P R
- D P R
- TENDER
- CONSTRUCTION

NOTES :

CLIENT :
CHENNAI METRO RAIL LIMITED
Admin Building, CMRL Depot, Poonamallee High Road, Koyambedu, Chennai -600107, Tamil Nadu, India.

CONSULTANT:
Infra Support
Your Complete Engineering Partner
INFRA SUPPORT ENGINEERING CONSULTANTS PVT. LTD.
An ISO 9001-2008 Certified Company
#934, 3rd Cross, HRBR Layout 1st Block
Kalyana nagar, Bangalore 560043, India
Phone: +91 80 25421364
corporate@infrasupport.in www.infrasupport.in

DESIGNED	AKK
DRAWN	PHG
CHECKED	RR
DATE	Nov - 2016
SHEET	16 of 22

PROJECT: ***Preparation of Feasibility Report & Detailed Project Report for Construction of Pedestrian Subways at Two Locations in Chennai for the Chennai Metropolitan Development Authority (CMDA)***

TITLE : Foundation Layout of Foot Over Bridge at Alandur Metro Station

SCALE: NTS

DRG. NO. : IS - 1423 - HIG -AL - SE - 016

JOB NO. 1423

REVISION R7

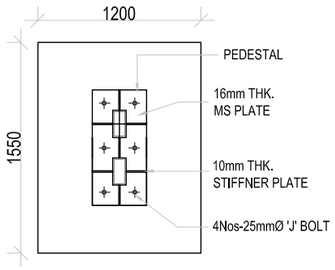

PLAN
SCALE-50

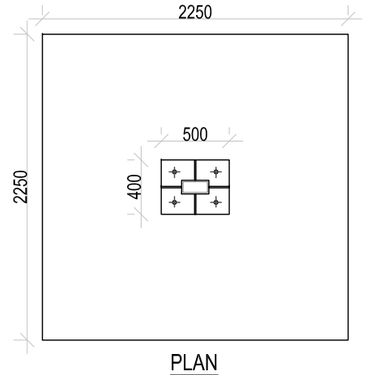

PLAN
SCALE-50

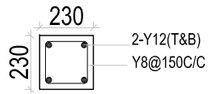

BEAM-1(TYP.)
SCALE-25

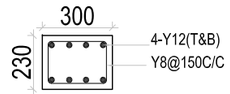

BEAM-2(TYP.)
SCALE-25

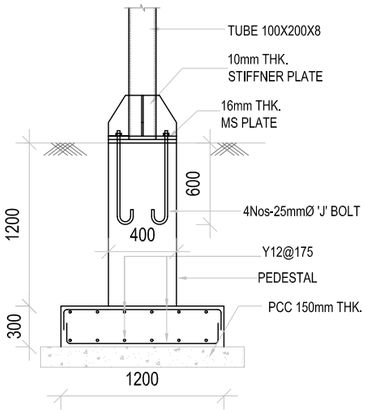

FOOTING DETAILS (F5)
SCALE-1:50

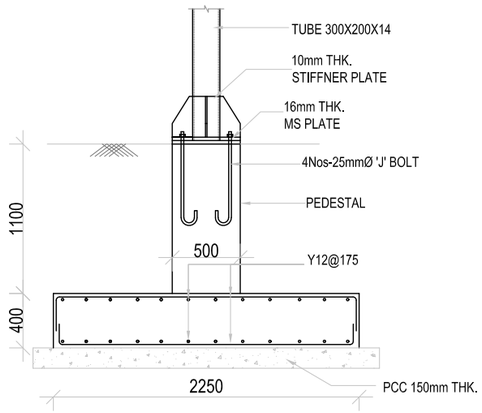

FOOTING DETAILS (F6)
SCALE-1:50

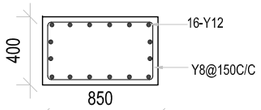

PEDESTAL RC DETAILS
SCALE-1:50

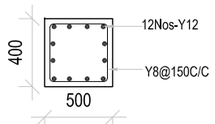

PEDESTAL RC DETAILS
SCALE-1:50

NOTES:

1. ALL DIMENSIONS ARE IN MILLI METER. EXCEPT LEVELS, WHICH ARE IN METERS. DO NOT SCALE THE DRAWING. ONLY WRITEN DIMENSIONS ARE ARE TO BE FOLLOWED.
2. ALL STEEL FABRICATION SHALL BE AS PER IS 800.
3. ALL WELDS ARE FILLET WELD OF 6 MM SIZE UNLESS OTHERWISE SPECIFIED.
4. WELDING SHALL BE DONE AS PER IS 816 -69 FOR ARC WELDING.
5. ALL STRUCTURAL STEEL SHALL BE CONFIRMING TO IS 2062 .
6. ALL RCC WORKS SHALL CONFIRM TO IS 456-2000
7. CLEAR COVER TO MAIN REINFORCEMENT SHALL BE FOLLOWS:
   a) Footings = 50 mm b) Column = 40mm.
8. GRADE OF CONCRETE SHALL BE M25
9. `Y' DENOTES HYSD BARS (Fe 500)
10. 150kN/sq.m SBC IS CONSIDERED AT A DEPTH OF 1.5M BELOW EXISTING GROUND LEVEL.

SI NO.	DESCRIPTION	REVISION.	BY	DATE
01	R6 drawings were proof checked by IIT-M	R7	IIT-M	17/12/2015 11/08/2016

RELEASED FOR
- INFORMATION
- Draft D P R
- D P R
- TENDER
- CONSTRUCTION

NOTES :

CLIENT :
CHENNAI METRO RAIL LIMITED
Admin Building, CMRL Depot, Poonamallee High Road, Koyambedu, Chennai -600107, Tamil Nadu, India.

CONSULTANT:
Infra Support
Your Complete Engineering Partner
INFRA SUPPORT ENGINEERING CONSULTANTS PVT. LTD.
An ISO 9001-2008 Certified Company
#934, 3rd Cross, HRBR Layout 1st Block
Kalyana nagar, Bangalore 560043, India
Phone: +91 80 25421364
corporate@infrasupport.in www.infrasupport.in

DESIGNED	AKK
DRAWN	PHG
CHECKED	RR
DATE	Nov - 2016
SHEET	17 of 22

PROJECT: ***Preparation of Feasibility Report & Detailed Project Report for Construction of Pedestrian Subways at Two Locations in Chennai for the Chennai Metropolitan Development Authority (CMDA)***

TITLE : Foundation Layout of Foot Over Bridge at Alandur Metro Station

SCALE: NTS

DRG. NO. : IS - 1423 - HIG -AL - SE - 017

JOB NO. 1423

REVISION R7

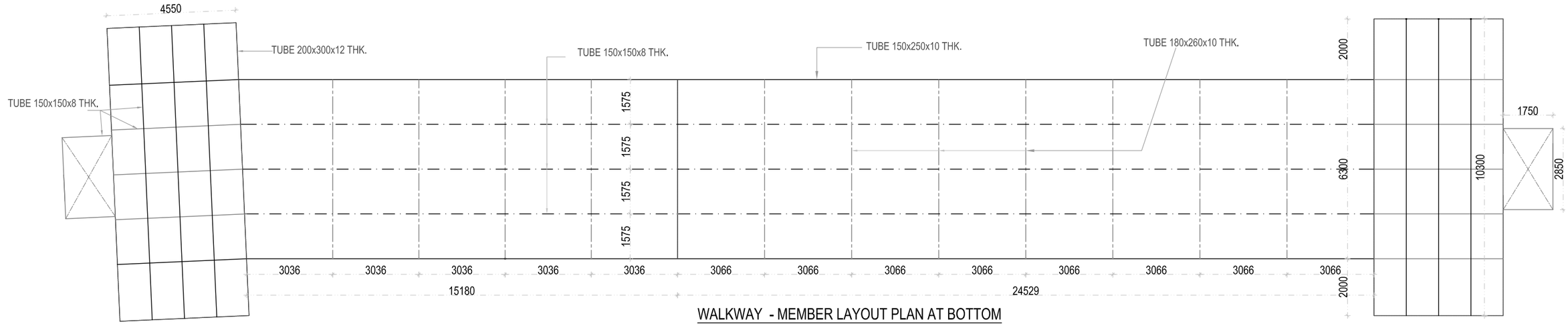

WALKWAY - MEMBER LAYOUT PLAN AT BOTTOM

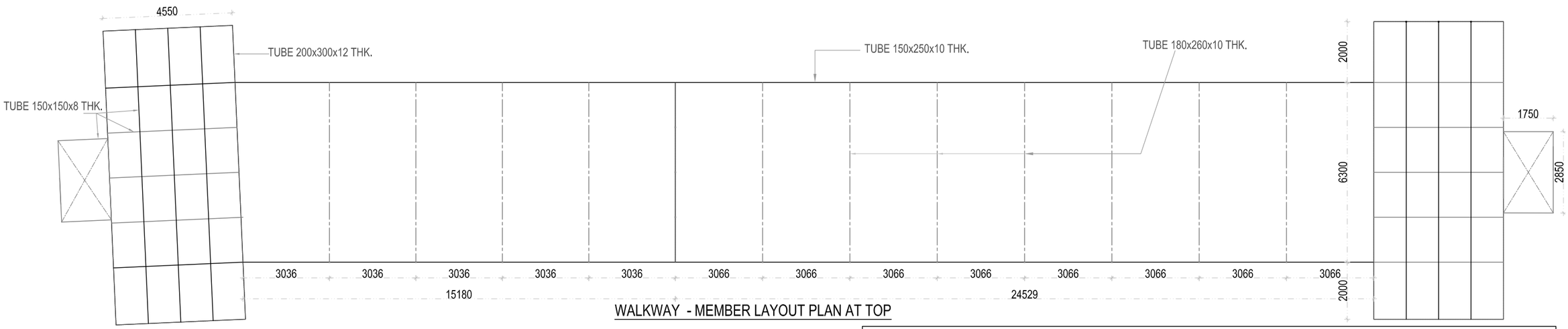

WALKWAY - MEMBER LAYOUT PLAN AT TOP

NOTES:

1. ALL DIMENSIONS ARE IN MILLI METER. EXCEPT LEVELS, WHICH ARE IN METERS. DO NOT SCALE THE DRAWING. ONLY WRITEN DIMENSIONS ARE ARE TO BE FOLLOWED.
2. ALL STEEL FABRICATION SHALL BE AS PER IS 800.
3. ALL WELDS ARE FILLET WELD OF 6 MM SIZE UNLESS OTHERWISE SPECIFIED.
4. WELDING SHALL BE DONE AS PER IS 816 -69 FOR ARC WELDING.
5. ALL STRUCTURAL STEEL SHALL BE CONFIRMING TO IS 2062 .
6. ALL RCC WORKS SHALL CONFIRM TO IS 456-2000
7. CLEAR COVER TO MAIN REINFORCEMENT SHALL BE FOLLOWS:
   a) Footings = 50 mm b) Column = 40mm.
8. GRADE OF CONCRETE SHALL BE M25
9. `Y' DENOTES HYSD BARS (Fe 500)
10. 150kN/sq.m SBC IS CONSIDERED AT A DEPTH OF 1.5M BELOW EXISTING GROUND LEVEL.

SI NO.	DESCRIPTION	REVISION.	BY	DATE
01	R6 drawings were proof checked by IIT-M	R7	IIT-M	17/12/2015
				11/08/2016

RELEASED FOR
- [ ] INFORMATION
- [ ] Draft D P R
- [ ] D P R
- [x] TENDER
- [ ] CONSTRUCTION

NOTES :

CLIENT :
CHENNAI METRO RAIL LIMITED
Admin Building, CMRL Depot, Poonamallee High Road, Koyambedu, Chennai -600107, Tamil Nadu, India.

CONSULTANT:
Infra Support
Your Complete Engineering Partner
INFRA SUPPORT ENGINEERING CONSULTANTS PVT. LTD.
An ISO 9001-2008 Certified Company
#934, 3rd Cross, HRBR Layout 1st Block
Kalyana nagar, Bangalore 560043, India
Phone: +91 80 25421364
corporate@infrasupport.in www.infrasupport.in

DESIGNED	AKK
DRAWN	PHG
CHECKED	RR
DATE	Nov - 2016
SHEET	18 of 22

PROJECT: ***Preparation of Feasibility Report & Detailed Project Report for Construction of Pedestrian Subways at Two Locations in Chennai for the Chennai Metropolitan Development Authority (CMDA)***

TITLE : Top & Bottom Plan of Foot Over Bridge at Alandur Metro Station

SCALE: NTS

DRG. NO. : IS - 1423 - HIG -AL - SE - 018

JOB NO. 1423

REVISION R7

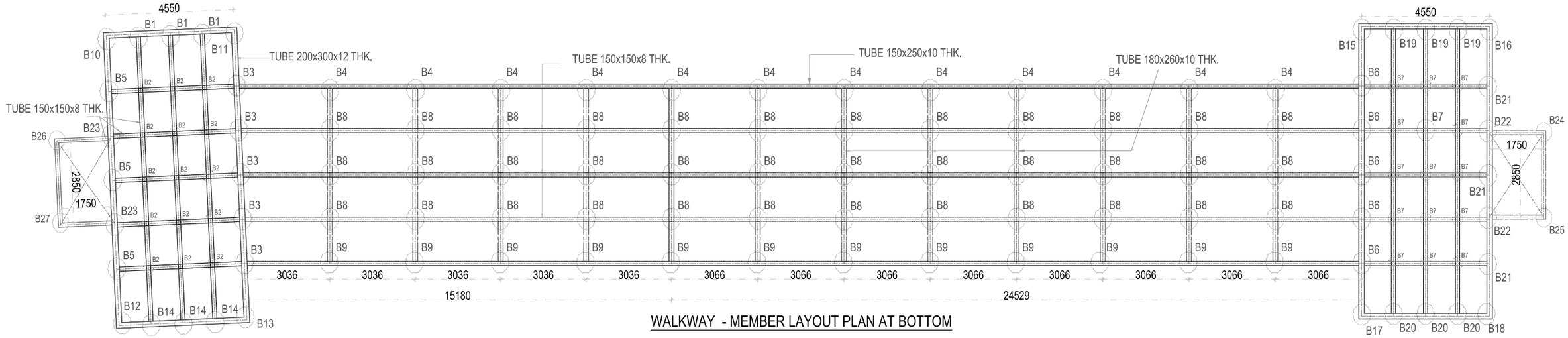

WALKWAY - MEMBER LAYOUT PLAN AT BOTTOM

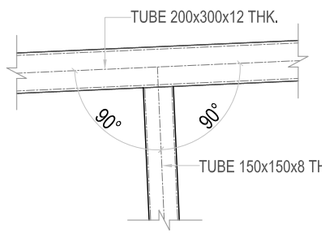

DETAIL-B1(TYP.)
SCALE-25

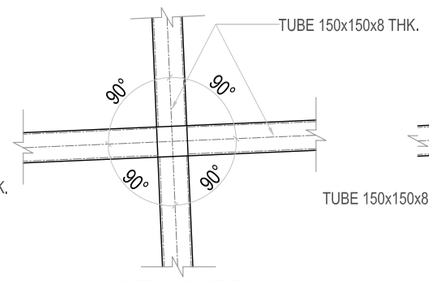

DETAIL-B2(TYP.)
SCALE-25

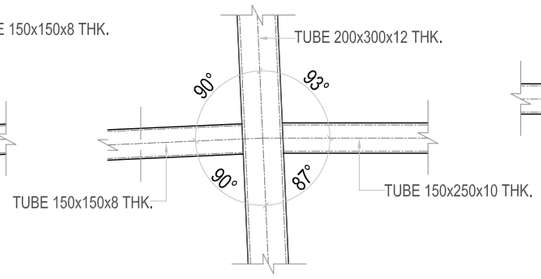

DETAIL-B3(TYP.)
SCALE-25

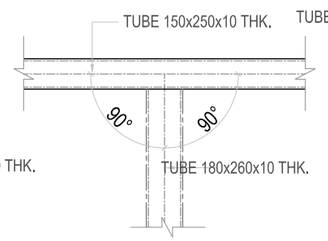

DETAIL-B4(TYP.)
SCALE-25

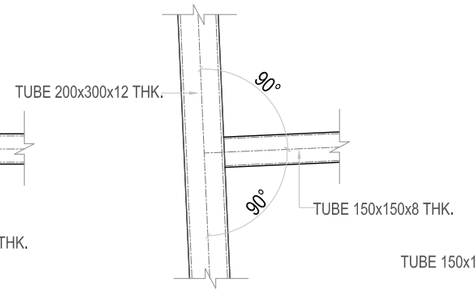

DETAIL-B5 (TYP.)
SCALE-25

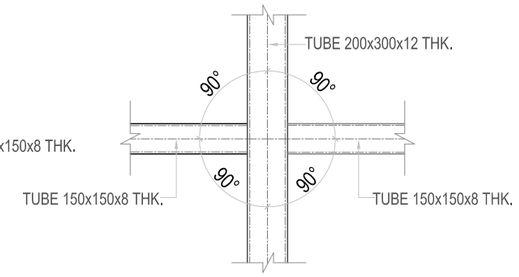

DETAIL-B6 (TYP.)
SCALE-25

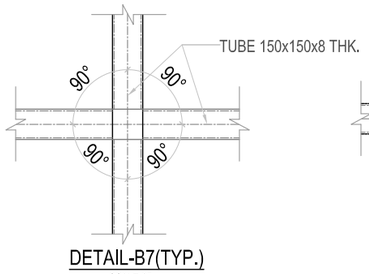

DETAIL-B7(TYP.)
SCALE-25

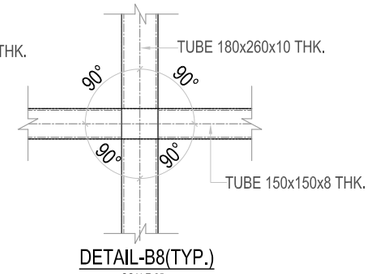

DETAIL-B8(TYP.)
SCALE-25

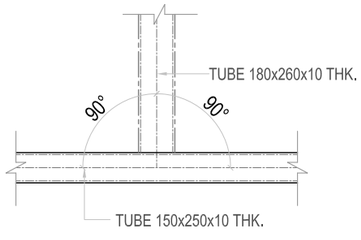

DETAIL-B9(TYP.)
SCALE-25

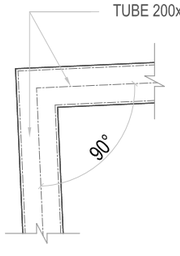

DETAIL-B10(TYP.)
SCALE-25

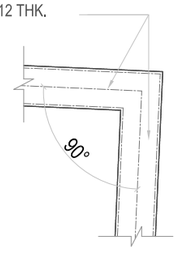

DETAIL-B11(TYP.)
SCALE-25

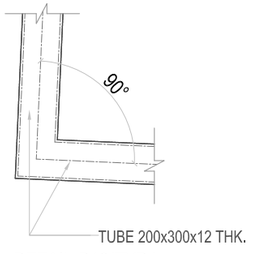

DETAIL-B12(TYP.)
SCALE-25

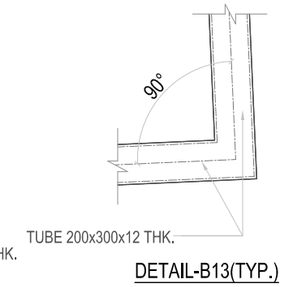

DETAIL-B13(TYP.)
SCALE-25

NOTES:

1. ALL DIMENSIONS ARE IN MILLI METER. EXCEPT LEVELS, WHICH ARE IN METERS. DO NOT SCALE THE DRAWING. ONLY WRITEN DIMENSIONS ARE ARE TO BE FOLLOWED.
2. ALL STEEL FABRICATION SHALL BE AS PER IS 800.
3. ALL WELDS ARE FILLET WELD OF 6 MM SIZE UNLESS OTHERWISE SPECIFIED.
4. WELDING SHALL BE DONE AS PER IS 816 -69 FOR ARC WELDING.
5. ALL STRUCTURAL STEEL SHALL BE CONFIRMING TO IS 2062 .
6. ALL RCC WORKS SHALL CONFIRM TO IS 456-2000
7. CLEAR COVER TO MAIN REINFORCEMENT SHALL BE FOLLOWS: a) Footings = 50 mm b) Column = 40mm.
8. GRADE OF CONCRETE SHALL BE M25
9. `Y' DENOTES HYSD BARS (Fe 500)
10. 150kN/sq.m SBC IS CONSIDERED AT A DEPTH OF 1.5M BELOW EXISTING GROUND LEVEL.

SI NO.	DESCRIPTION	REVISION.	BY	DATE
01	R6 drawings were proof checked by IIT-M	R7	IIT-M	17/12/2015
				11/08/2016

RELEASED FOR
- [ ] INFORMATION
- [ ] Draft D P R
- [ ] D P R
- [x] TENDER
- [ ] CONSTRUCTION

NOTES :

CLIENT :
CHENNAI METRO RAIL LIMITED
Admin Building, CMRL Depot, Poonamallee High Road, Koyambedu, Chennai -600107, Tamil Nadu, India.

CONSULTANT:
Infra Support
Your Complete Engineering Partner
INFRA SUPPORT ENGINEERING CONSULTANTS PVT. LTD.
An ISO 9001-2008 Certified Company
#934, 3rd Cross, HRBR Layout 1st Block
Kalyana nagar, Bangalore 560043, India
Phone: +91 80 25421364
corporate@infrasupport.in www.infrasupport.in

DESIGNED	AKK	PROJECT:	***Preparation of Feasibility Report & Detailed Project Report for Construction of Pedestrian Subways at Two Locations in Chennai for the Chennai Metropolitan Development Authority (CMDA)***
DRAWN	PHG		
CHECKED	RR		
DATE	Nov - 2016	TITLE :	Foundation Layout of Foot Over Bridge at Alandur Metro Station
SHEET	19 of 22	SCALE: NTS	DRG. NO. : IS - 1423 - HIG -AL - SE - 019

JOB NO. 1423
REVISION R7

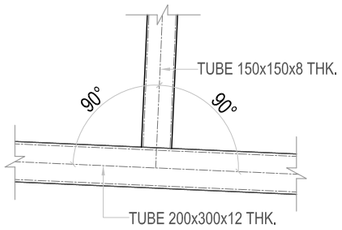

DETAIL-B14(TYP.)
SCALE-25

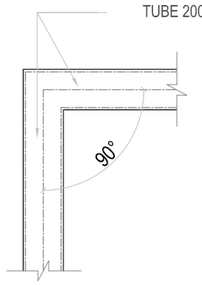

DETAIL-B15(TYP.)
SCALE-25

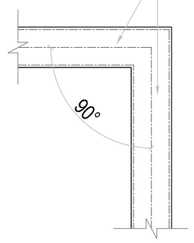

DETAIL-B16(TYP.)
SCALE-25

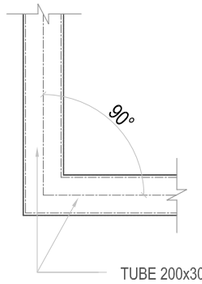

DETAIL-B17(TYP.)
SCALE-25

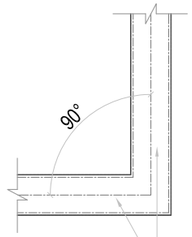

DETAIL-B18(TYP.)
SCALE-25

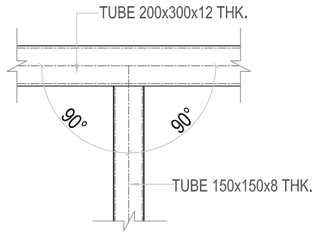

DETAIL-B19(TYP.)
SCALE-25

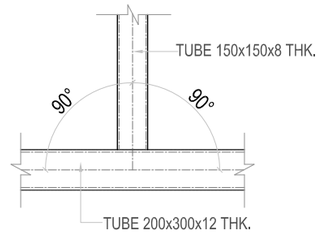

DETAIL-B20(TYP.)
SCALE-25

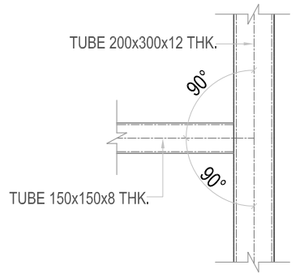

DETAIL-B21 (TYP.)
SCALE-25

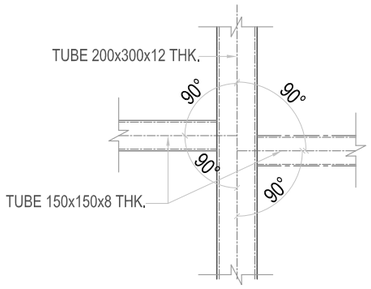

DETAIL-B22 (TYP.)
SCALE-25

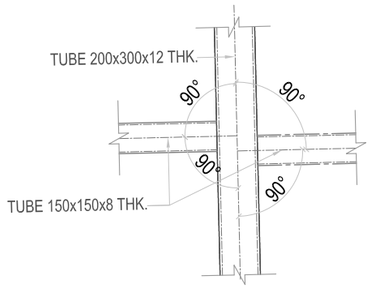

DETAIL-B23 (TYP.)
SCALE-25

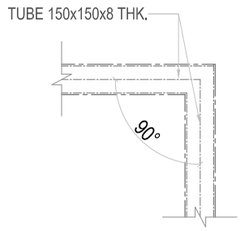

DETAIL-B24 (TYP.)
SCALE-25

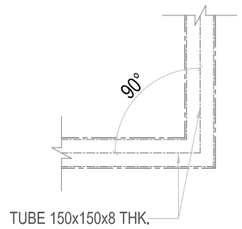

DETAIL-B25 (TYP.)
SCALE-25

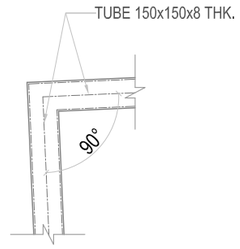

DETAIL-B26 (TYP.)
SCALE-25

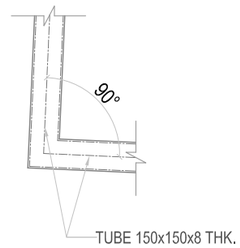

DETAIL-B27 (TYP.)
SCALE-25

NOTES:

1. ALL DIMENSIONS ARE IN MILLI METER. EXCEPT LEVELS, WHICH ARE IN METERS. DO NOT SCALE THE DRAWING. ONLY WRITEN DIMENSIONS ARE ARE TO BE FOLLOWED.
2. ALL STEEL FABRICATION SHALL BE AS PER IS 800.
3. ALL WELDS ARE FILLET WELD OF 6 MM SIZE UNLESS OTHERWISE SPECIFIED.
4. WELDING SHALL BE DONE AS PER IS 816 -69 FOR ARC WELDING.
5. ALL STRUCTURAL STEEL SHALL BE CONFIRMING TO IS 2062 .
6. ALL RCC WORKS SHALL CONFIRM TO IS 456-2000
7. CLEAR COVER TO MAIN REINFORCEMENT SHALL BE FOLLOWS:
   a) Footings = 50 mm b) Column = 40mm.
8. GRADE OF CONCRETE SHALL BE M25
9. `Y' DENOTES HYSD BARS (Fe 500)
10. 150kN/sq.m SBC IS CONSIDERED AT A DEPTH OF 1.5M BELOW EXISTING GROUND LEVEL.

SI NO.	DESCRIPTION	REVISION.	BY	DATE
01	R6 drawings were proof checked by IIT-M	R7	IIT-M	17/12/2015 11/08/2016

RELEASED FOR
- [ ] INFORMATION
- [ ] Draft D P R
- [ ] D P R
- [x] TENDER
- [ ] CONSTRUCTION

NOTES :

CLIENT :
CHENNAI METRO RAIL LIMITED
Admin Building, CMRL Depot, Poonamallee High Road, Koyambedu, Chennai -600107, Tamil Nadu, India.

CONSULTANT:
Infra Support
Your Complete Engineering Partner
INFRA SUPPORT ENGINEERING CONSULTANTS PVT. LTD.
An ISO 9001-2008 Certified Company
#934, 3rd Cross, HRBR Layout 1st Block
Kalyana nagar, Bangalore 560043, India
Phone: +91 80 25421364
corporate@infrasupport.in www.infrasupport.in

DESIGNED	AKK	PROJECT:	***Preparation of Feasibility Report & Detailed Project Report for Construction of Pedestrian Subways at Two Locations in Chennai for the Chennai Metropolitan Development Authority (CMDA)***
DRAWN	PHG		JOB NO. 1423
CHECKED	RR	TITLE :	Foundation Layout of Foot Over Bridge at Alandur Metro Station
DATE	Nov - 2016		REVISION
SHEET	20 of 22	SCALE: NTS	DRG. NO. : IS - 1423 - HIG -AL - SE - 020 — R7

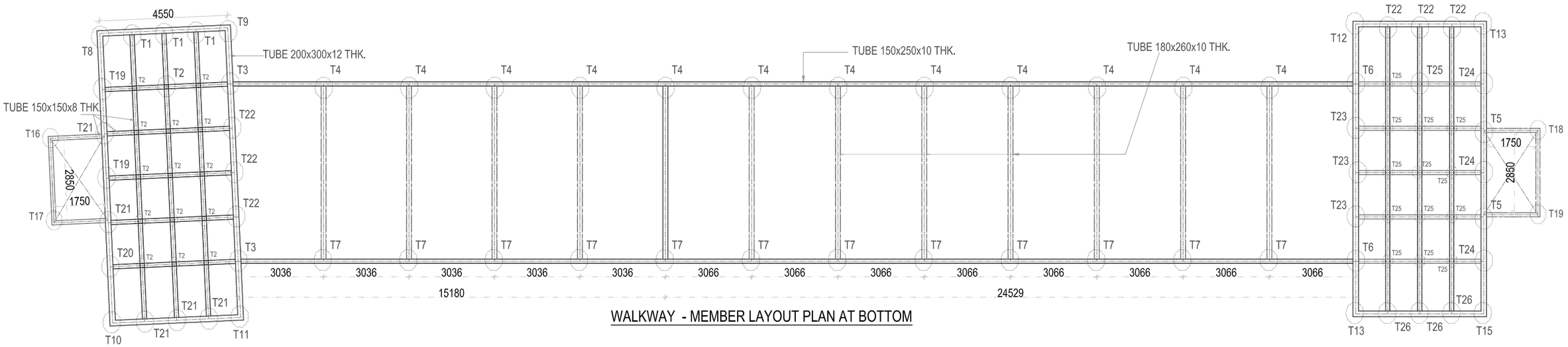

WALKWAY - MEMBER LAYOUT PLAN AT BOTTOM

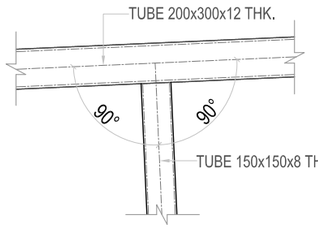

DETAIL-T1(TYP.)
SCALE-25

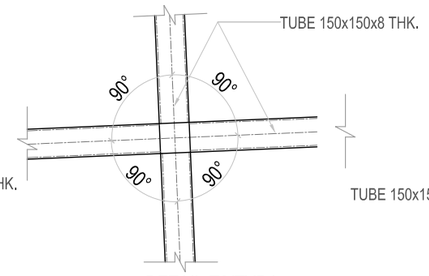

DETAIL-T2(TYP.)
SCALE-25

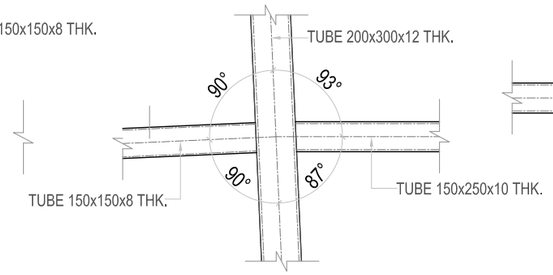

DETAIL-T3(TYP.)
SCALE-25

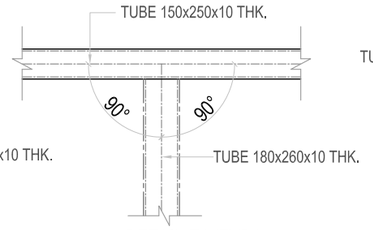

DETAIL-T4 (TYP.)
SCALE-25

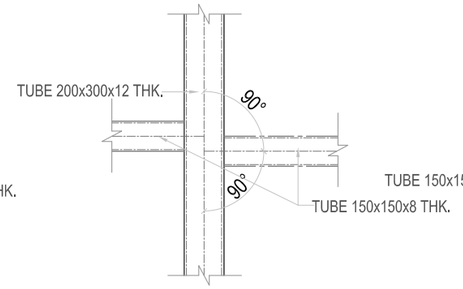

DETAIL-T5 (TYP.)
SCALE-25

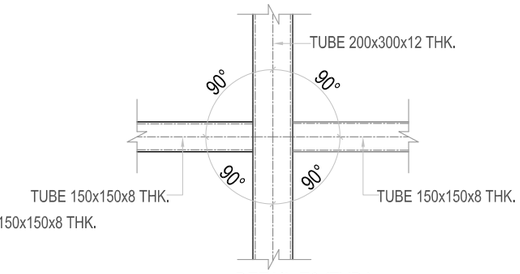

DETAIL-T6 (TYP.)
SCALE-25

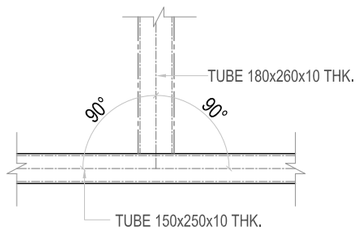

DETAIL-T7 (TYP.)
SCALE-25

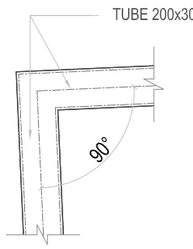

DETAIL-T8(TYP.)
SCALE-25

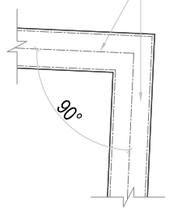

DETAIL-T9(TYP.)
SCALE-25

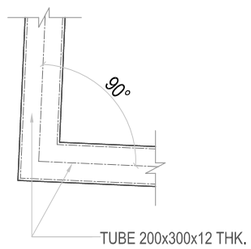

DETAIL-T10(TYP.)
SCALE-25

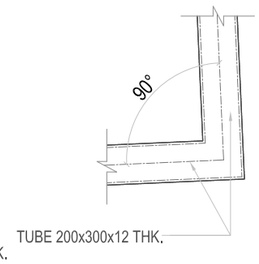

DETAIL-T11(TYP.)
SCALE-25

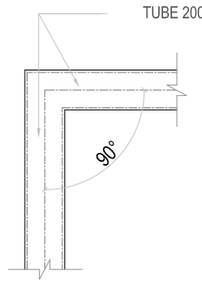

DETAIL-T12(TYP.)
SCALE-25

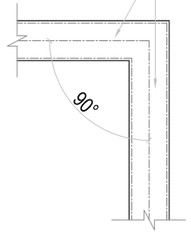

DETAIL-T13(TYP.)
SCALE-25

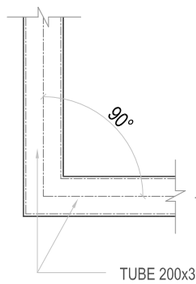

DETAIL-T14(TYP.)
SCALE-25

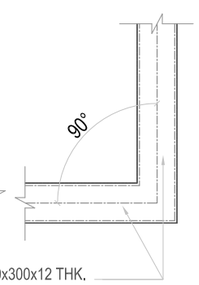

DETAIL-T15(TYP.)
SCALE-25

NOTES:

1. ALL DIMENSIONS ARE IN MILLI METER. EXCEPT LEVELS, WHICH ARE IN METERS. DO NOT SCALE THE DRAWING. ONLY WRITEN DIMENSIONS ARE ARE TO BE FOLLOWED.
2. ALL STEEL FABRICATION SHALL BE AS PER IS 800.
3. ALL WELDS ARE FILLET WELD OF 6 MM SIZE UNLESS OTHERWISE SPECIFIED.
4. WELDING SHALL BE DONE AS PER IS 816 -69 FOR ARC WELDING.
5. ALL STRUCTURAL STEEL SHALL BE CONFIRMING TO IS 2062 .
6. ALL RCC WORKS SHALL CONFIRM TO IS 456-2000
7. CLEAR COVER TO MAIN REINFORCEMENT SHALL BE FOLLOWS: a) Footings = 50 mm b) Column = 40mm.
8. GRADE OF CONCRETE SHALL BE M25
9. `Y' DENOTES HYSD BARS (Fe 500)
10. 150kN/sq.m SBC IS CONSIDERED AT A DEPTH OF 1.5M BELOW EXISTING GROUND LEVEL.

SI NO.	DESCRIPTION	REVISION.	BY	DATE
01	R6 drawings were proof checked by IIT-M	R7	IIT-M	17/12/2015
				11/08/2016

RELEASED FOR
- [ ] INFORMATION
- [ ] Draft D P R
- [ ] D P R
- [x] TENDER
- [ ] CONSTRUCTION

NOTES :

CLIENT :
CHENNAI METRO RAIL LIMITED
Admin Building, CMRL Depot, Poonamallee High Road, Koyambedu, Chennai -600107, Tamil Nadu, India.

CONSULTANT:
Infra Support
Your Complete Engineering Partner
INFRA SUPPORT ENGINEERING CONSULTANTS PVT. LTD.
An ISO 9001-2008 Certified Company
#934, 3rd Cross, HRBR Layout 1st Block
Kalyana nagar, Bangalore 560043, India
Phone: +91 80 25421364
corporate@infrasupport.in www.infrasupport.in

DESIGNED	AKK	PROJECT:	***Preparation of Feasibility Report & Detailed Project Report for Construction of Pedestrian Subways at Two Locations in Chennai for the Chennai Metropolitan Development Authority (CMDA)***
DRAWN	PHG		
CHECKED	RR	TITLE :	Foundation Layout of Foot Over Bridge at Alandur Metro Station
DATE	Nov - 2016		
SHEET	21 of 22	SCALE: NTS	DRG. NO. : IS - 1423 - HIG - AL - SE - 021

JOB NO. 1423
REVISION R7

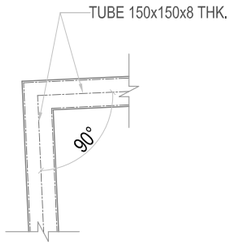

DETAIL-T16 (TYP.)
SCALE-25

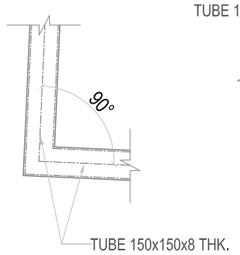

DETAIL-T17 (TYP.)
SCALE-25

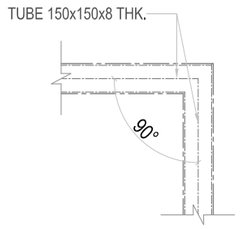

DETAIL-T18 (TYP.)
SCALE-25

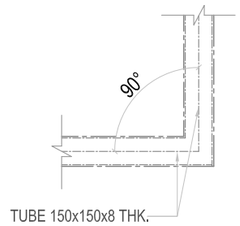

DETAIL-T19 (TYP.)
SCALE-25

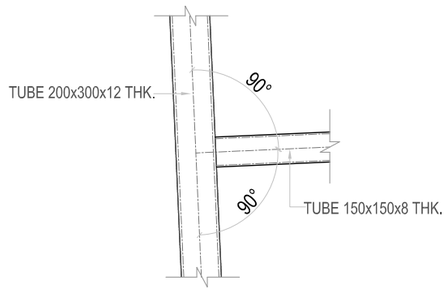

DETAIL-T20 (TYP.)
SCALE-25

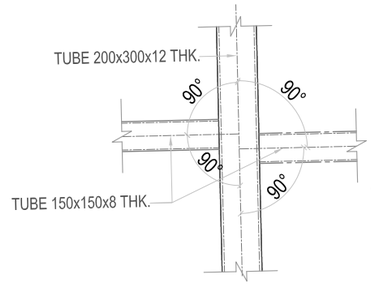

DETAIL-T 21(TYP.)
SCALE-25

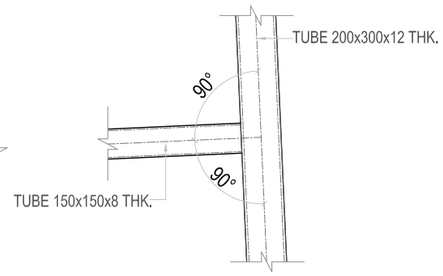

DETAIL-T22(TYP.)
SCALE-25

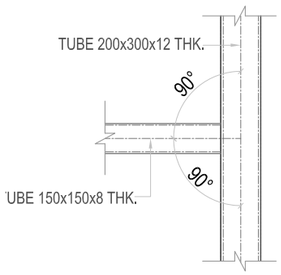

DETAIL-B24 (TYP.)
SCALE-25

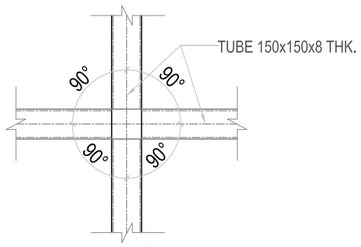

DETAIL-T25(TYP.)
SCALE-25

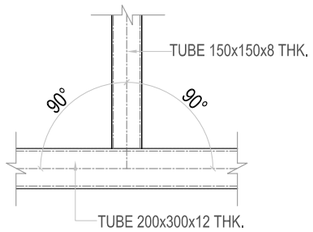

DETAIL-T26(TYP.)
SCALE-25

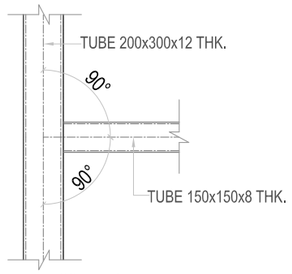

DETAIL-T23 (TYP.)
SCALE-25

NOTES:

1. ALL DIMENSIONS ARE IN MILLI METER. EXCEPT LEVELS, WHICH ARE IN METERS. DO NOT SCALE THE DRAWING. ONLY WRITEN DIMENSIONS ARE ARE TO BE FOLLOWED.
2. ALL STEEL FABRICATION SHALL BE AS PER IS 800.
3. ALL WELDS ARE FILLET WELD OF 6 MM SIZE UNLESS OTHERWISE SPECIFIED.
4. WELDING SHALL BE DONE AS PER IS 816 -69 FOR ARC WELDING.
5. ALL STRUCTURAL STEEL SHALL BE CONFIRMING TO IS 2062 .
6. ALL RCC WORKS SHALL CONFIRM TO IS 456-2000
7. CLEAR COVER TO MAIN REINFORCEMENT SHALL BE FOLLOWS:
   a) Footings = 50 mm b) Column = 40mm.
8. GRADE OF CONCRETE SHALL BE M25
9. `Y' DENOTES HYSD BARS (Fe 500)
10. 150kN/sq.m SBC IS CONSIDERED AT A DEPTH OF 1.5M BELOW EXISTING GROUND LEVEL.

SI NO.	DESCRIPTION	REVISION.	BY	DATE
01	R6 drawings were proof checked by IIT-M	R7	IIT-M	17/12/2015
				11/08/2016

RELEASED FOR
- [ ] INFORMATION
- [ ] Draft D P R
- [ ] D P R
- [x] TENDER
- [ ] CONSTRUCTION

NOTES :

CLIENT :
CHENNAI METRO RAIL LIMITED
Admin Building, CMRL Depot, Poonamallee High Road, Koyambedu, Chennai -600107, Tamil Nadu, India.

CONSULTANT:
Infra Support
Your Complete Engineering Partner
INFRA SUPPORT ENGINEERING CONSULTANTS PVT. LTD.
An ISO 9001-2008 Certified Company
#934, 3rd Cross, HRBR Layout 1st Block
Kalyana nagar, Bangalore 560043, India
Phone: +91 80 25421364
corporate@infrasupport.in www.infrasupport.in

DESIGNED	AKK
DRAWN	PHG
CHECKED	RR
DATE	Nov - 2016
SHEET	22 of 22

PROJECT: ***Preparation of Feasibility Report & Detailed Project Report for Construction of Pedestrian Subways at Two Locations in Chennai for the Chennai Metropolitan Development Authority (CMDA)***

TITLE : Foundation Layout of Foot Over Bridge at Alandur Metro Station

SCALE: NTS

DRG. NO. : IS - 1423 - HIG -AL - SE - 022

JOB NO. 1423

REVISION R7

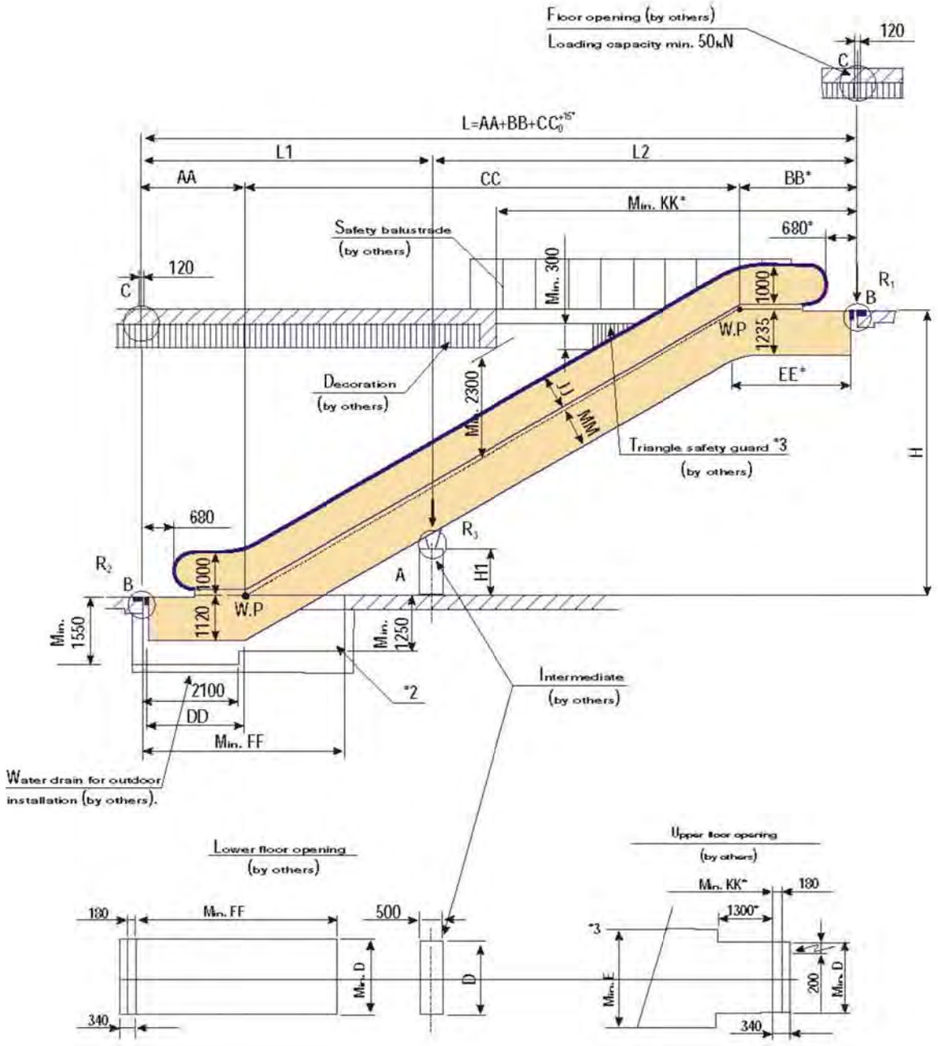

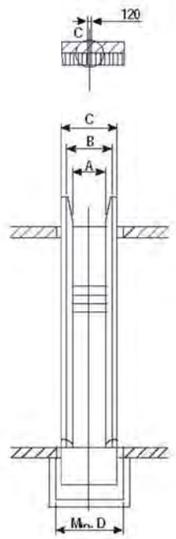

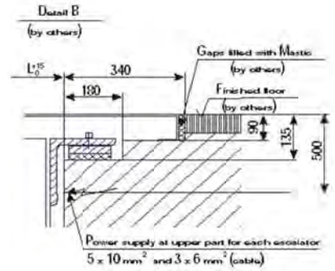

Notes:

1) According to EN 115, the entrance to both landings must have enough area to facilitate traffic flow.
2) Dimensions with mark* should be guaranteed 470 mm in case A=600 or double drive.
4) The intermediate support can be made of reinforced concrete or steel structure (by others).
5) All dimensions refer to finished dimensions in mm.

Asterisks:

*1: Supports need to be at true level.
*2: If there is a pit, it needs to be waterproof and smooth.
*3: If dimension E cannot be guaranteed, a guard according to En 115 must be provided as shown (by others).

Escalator Length		
L=AA+BB+CC		
2231	2598	H*1.732
15653		

Support Load (KN)		
Note : L= 15653 , L1 = 6561 ,L2= 9092		
A	With Intermediate support	
1000	R1=4.95*L2+17.2	62.21
	R2=4.95*L1+8.3	40.78
	R3=4.7*L+11.3	84.87

Type	a	Upper Radius	AA	BB	CC	DD	EE	FF	JJ	KK	MM
FEH302	30°	1500	2231	2598	H*1.732	2370	2815	4530	870	8000	1060

(Source: As per Manufacture specifications and deails)

SI NO.	DESCRIPTION	REVISION.	BY	DATE
01	R6 drawings were proof checked by IIT-M	R7	IIT-M	17/12/2015 11/08/2016

RELEASED FOR
- [ ] INFORMATION
- [ ] Draft D P R
- [ ] D P R
- [x] TENDER
- [ ] CONSTRUCTION

NOTES :

CLIENT :
CHENNAI METRO RAIL LIMITED
Admin Building, CMRL Depot, Poonamallee High Road, Koyambedu, Chennai -600107, Tamil Nadu, India.

CONSULTANT:
Infra Support
Your Complete Engineering Partner
INFRA SUPPORT ENGINEERING CONSULTANTS PVT. LTD.
An ISO 9001-2008 Certified Company
#934, 3rd Cross, HRBR Layout 1st Block
Kalyana nagar, Bangalore 560043, India
Phone: +91 80 25421364
corporate@infrasupport.in www.infrasupport.in

DESIGNED	AKK	PROJECT:	Preparation of Feasibility Report & Detailed Project Report for Construction of Pedestrian Subways at Two Locations in Chennai for the Chennai Metropolitan Development Authority (CMDA)
DRAWN	PHG		
CHECKED	RR		
DATE	Nov - 2016	TITLE :	ESCALATOR DETAILS (As Provided by the Manufacturer)
SHEET	1 of 1	SCALE:	NTS

DRG. NO. : IS - 1423 - HIG - AL - EL - 001

JOB NO. 1423

REVISION R7

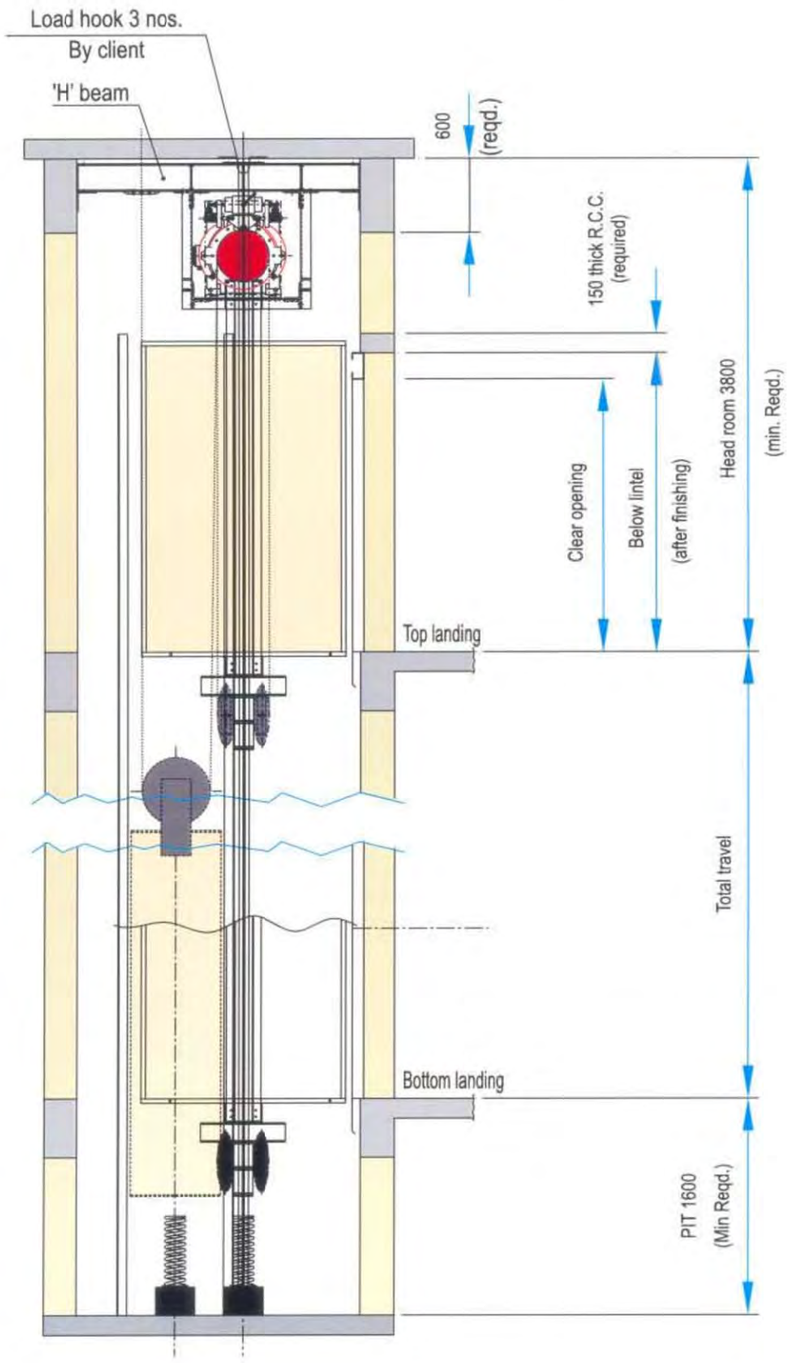

Centre opening door lift:
Plan of liftwell and machine room.

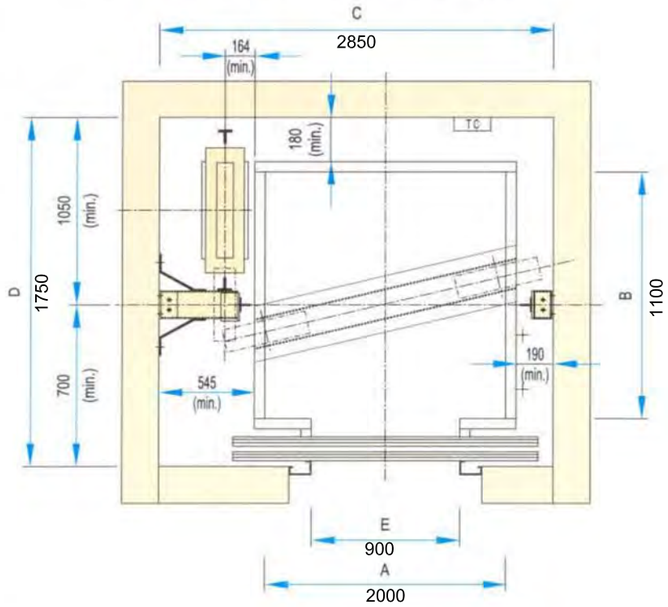

Lift						
Load		Car Inside		Lift well		Entrance
Persons	Kgs	A	B	C	D	E
13	884	2000	1100	2850	1750	900

SI NO.	DESCRIPTION	REVISION.	BY	DATE
01	R6 drawings were proof checked by IIT-M	R7	IIT-M	17/12/2015 11/08/2016

RELEASED FOR
- [ ] INFORMATION
- [ ] Draft D P R
- [ ] D P R
- [x] TENDER
- [ ] CONSTRUCTION

NOTES :

CLIENT :
CHENNAI METRO RAIL LIMITED
Admin Building, CMRL Depot, Poonamallee High Road, Koyambedu, Chennai -600107, Tamil Nadu, India.

CONSULTANT:
Infra Support
Your Complete Engineering Partner
INFRA SUPPORT ENGINEERING CONSULTANTS PVT. LTD.
An ISO 9001-2008 Certified Company
#934, 3rd Cross, HRBR Layout 1st Block
Kalyana nagar, Bangalore 560043, India
Phone: +91 80 25421364
corporate@infrasupport.in www.infrasupport.in

DESIGNED	AKK	PROJECT:	Preparation of Feasibility Report & Detailed Project Report for Construction of Pedestrian Subways at Two Locations in Chennai for the Chennai Metropolitan Development Authority (CMDA)
DRAWN	PHG		
CHECKED	RR		
DATE	Nov - 2016	TITLE :	LIFT DETAILS (As Provided by the Manufacturer)
SHEET	1 of 1	SCALE:	NTS

DRG. NO. : IS - 1423 - HIG - AL - LD - 001

JOB NO. 1423

REVISION R7

ELECTRICAL DRAWINGS

DESCRIPTION	SYMBOL
AMF PANEL	
SUB LIGHTING DISTRIBUTION BOARD	
LED LIGHT	
STREET LIGHT	
CC CAMERA	
FIRE EXTINGUISHER	
6/16A 5 PIN SOCKET WITH SWITCH	

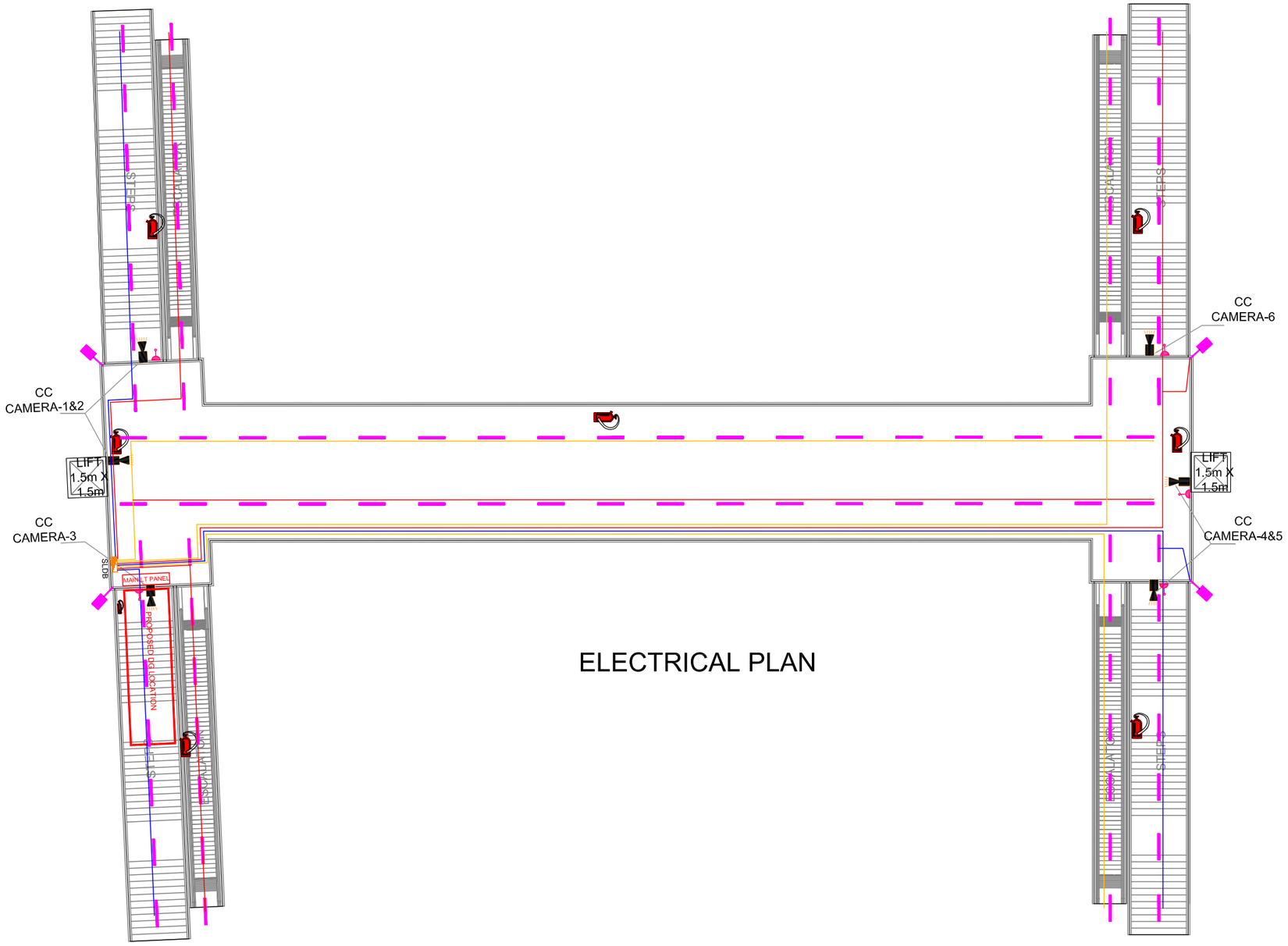

NOTES:

1. ALL DIMENSIONS ARE IN MILLI METER. EXCEPT LEVELS, WHICH ARE IN METERS. DO NOT SCALE THE DRAWING. ONLY WRITEN DIMENSIONS ARE ARE TO BE FOLLOWED.

SI NO.	DESCRIPTION	REVISION.	BY	DATE
01	R6 drawings were proof checked by IIT-M	R7	IIT-M	17/12/2015 11/08/2016

RELEASED FOR
- [ ] INFORMATION
- [ ] Draft D P R
- [ ] D P R
- [x] TENDER
- [ ] CONSTRUCTION

NOTES :

CLIENT :
CHENNAI METRO RAIL LIMITED
Admin Building, CMRL Depot, Poonamallee High Road, Koyambedu, Chennai -600107, Tamil Nadu, India.

CONSULTANT:
Infra Support
Your Complete Engineering Partner
INFRA SUPPORT ENGINEERING CONSULTANTS PVT. LTD.
An ISO 9001-2008 Certified Company
#934, 3rd Cross, HRBR Layout 1st Block
Kalyana nagar, Bangalore 560043, India
Phone: +91 80 25421364
corporate@infrasupport.in www.infrasupport.in

DESIGNED	AKK	PROJECT:	***Preparation of Feasibility Report & Detailed Project Report for Construction of Pedestrian Subways at Two Locations in Chennai for the Chennai Metropolitan Development Authority (CMDA)***
DRAWN	PHG		
CHECKED	RR	TITLE :	ELECTRICAL LAYOUT PLAN
DATE	Nov - 2016		
SHEET	1 of 3	SCALE:	NTS

JOB NO. 1423

REVISION R7

DRG. NO. : IS - 1423 - HIG - EL - 001

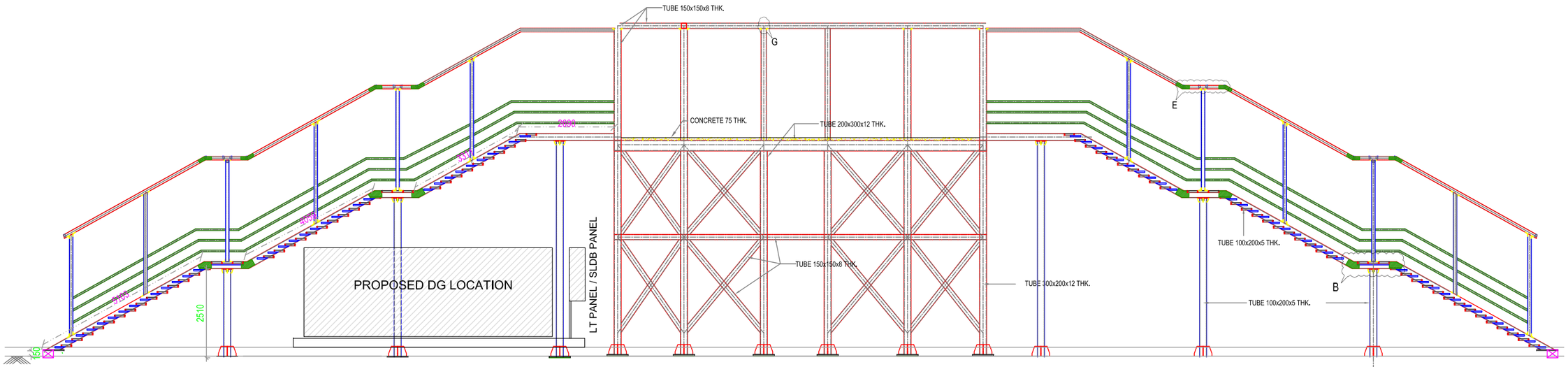

SIDE VIEW

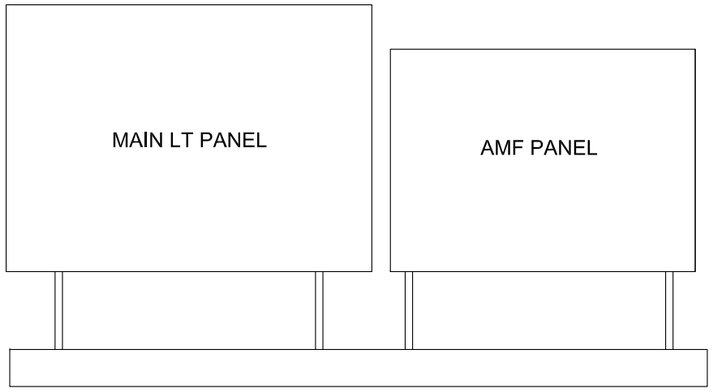

POWER DISTRIBUTION DETAILS

NOTES:

1. ALL DIMENSIONS ARE IN MILLI METER. EXCEPT LEVELS, WHICH ARE IN METERS. DO NOT SCALE THE DRAWING. ONLY WRITEN DIMENSIONS ARE ARE TO BE FOLLOWED.

SI NO.	DESCRIPTION	REVISION.	BY	DATE
01	R6 drawings were proof checked by IIT-M	R7	IIT-M	17/12/2015 11/08/2016

RELEASED FOR
- [ ] INFORMATION
- [ ] Draft D P R
- [ ] D P R
- [x] TENDER
- [ ] CONSTRUCTION

NOTES :

CLIENT :
CHENNAI METRO RAIL LIMITED
Admin Building, CMRL Depot, Poonamallee High Road, Koyambedu, Chennai -600107, Tamil Nadu, India.

CONSULTANT:
Infra Support
Your Complete Engineering Partner
INFRA SUPPORT ENGINEERING CONSULTANTS PVT. LTD.
An ISO 9001-2008 Certified Company
#934, 3rd Cross, HRBR Layout 1st Block
Kalyana nagar, Bangalore 560043, India
Phone: +91 80 25421364
corporate@infrasupport.in www.infrasupport.in

DESIGNED	AKK	PROJECT:	***Preparation of Feasibility Report & Detailed Project Report for Construction of Pedestrian Subways at Two Locations in Chennai for the Chennai Metropolitan Development Authority (CMDA)***
DRAWN	PHG		
CHECKED	RR		
DATE	Nov - 2016	TITLE :	ELECTRICAL PLAN
SHEET	2 of 3	SCALE:	NTS

DRG. NO. : IS - 1423 - HIG - EL - 002

JOB NO. 1423

REVISION R7

POWER DISTRIBUTION SCHEME

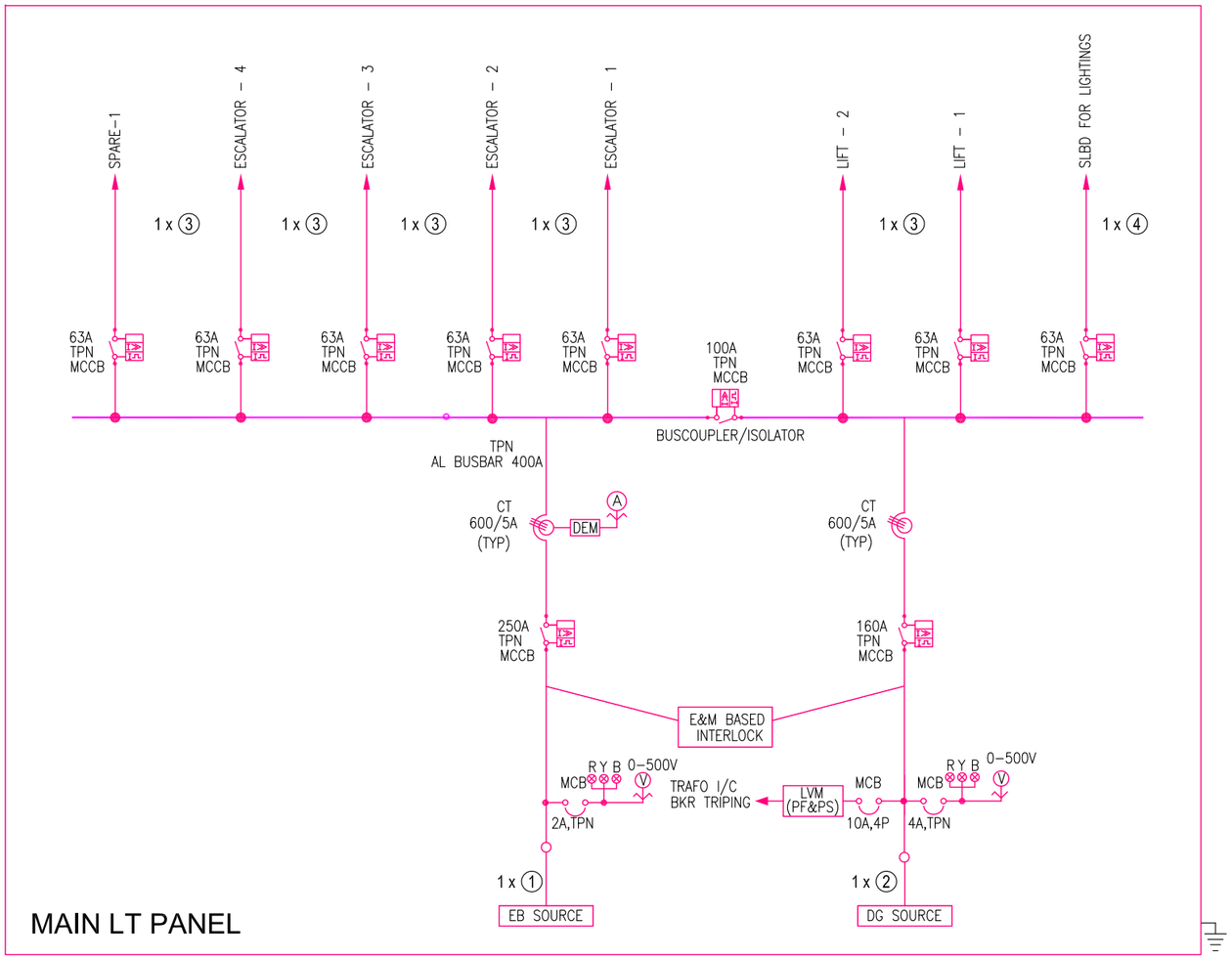

FROM LT PANEL
SUB LIGHTING DISTRIBUTION BOARD

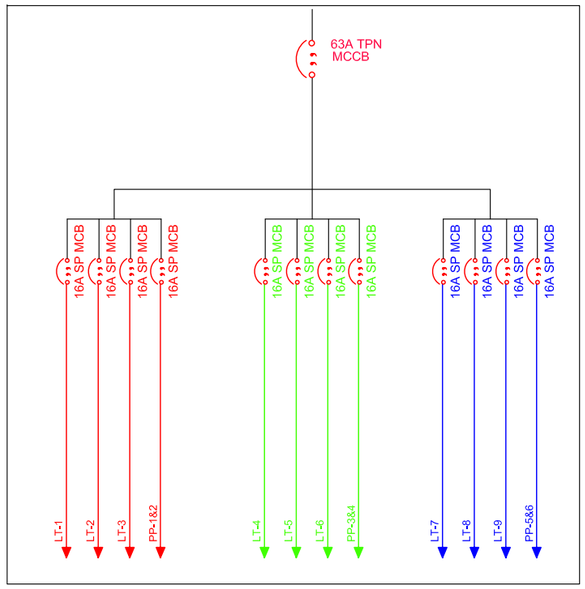

LT CABLE, 1.1kV XLPE, ALUMINIUM, ARMOURED.

ID No.	CABLE SIZE	VOLTAGE GRADE	TYPE	CONDUCTOR
1	3.5Cx120	1.1kV	XLPE	ALUMINIUM
2	3.5Cx70	1.1kV	XLPE	ALUMINIUM
3	4Cx35	1.1kV	XLPE	ALUMINIUM
4	6Cx10	1.1kV	XLPE	ALUMINIUM

DG OPERATION:

1) WHEN EB SOURCE (GRID) AVAILABLE – LOAD WILL BE FED FROM EB & DGs WILL BE OFF

2) UPON MAINS FAILURE THE DG SETS WILL START, DG BREAKER WILL CLOSE, BUSCOUPLER TO BE ISOLATED WITH INTERLOCK ARRANGEMENT

3) UPON RESUMPTION OF EB SOURCE, CHANGEOVER TO EB SOURCE WILL TAKE PLACE AND BUSCOUPLER SHALL BE CLOSED WITH INTERLOCK ARRANGEMENT

ONLY WRITEN DIMENSIONS ARE ARE TO BE FOLLOWED.

SI NO.	DESCRIPTION	REVISION.	BY	DATE
01	R6 drawings were proof checked by IIT-M	R7	IIT-M	17/12/2015 11/08/2016

RELEASED FOR
- [ ] INFORMATION
- [ ] Draft D P R
- [ ] D P R
- [x] TENDER
- [ ] CONSTRUCTION

NOTES :

CLIENT :
CHENNAI METRO RAIL LIMITED
Admin Building, CMRL Depot, Poonamallee High Road, Koyambedu, Chennai -600107, Tamil Nadu, India.

CONSULTANT:
Infra Support
Your Complete Engineering Partner
INFRA SUPPORT ENGINEERING CONSULTANTS PVT. LTD.
An ISO 9001-2008 Certified Company
#934, 3rd Cross, HRBR Layout 1st Block
Kalyana nagar, Bangalore 560043, India
Phone: +91 80 25421364
corporate@infrasupport.in www.infrasupport.in

DESIGNED	AKK	PROJECT:	***Preparation of Feasibility Report & Detailed Project Report for Construction of Pedestrian Subways at Two Locations in Chennai for the Chennai Metropolitan Development Authority (CMDA)***
DRAWN	PHG		
CHECKED	RR		
DATE	Nov - 2016	TITLE :	POWER DISTRIBUTION SCHEME
SHEET	3 of 3	SCALE:	NTS

DRG. NO. : IS - 1423 - HIG - EL - 003

JOB NO. 1423

REVISION R7

ARCHITECTURAL ELEVATION

SI NO.	DESCRIPTION	REVISION.	BY	DATE
01	R6 drawings were proof checked by IIT-M	R7	IIT-M	17/12/2015
				11/08/2016

RELEASED FOR
- [ ] INFORMATION
- [ ] Draft D P R
- [ ] D P R
- [x] TENDER
- [ ] CONSTRUCTION

NOTES :

CLIENT :

CHENNAI METRO RAIL LIMITED

Admin Building, CMRL Depot, Poonamallee High Road, Koyambedu, Chennai -600107, Tamil Nadu, India.

CONSULTANT:

Infra Support
Your Complete Engineering Partner

INFRA SUPPORT ENGINEERING CONSULTANTS PVT. LTD.

An ISO 9001-2008 Certified Company

#934, 3rd Cross, HRBR Layout 1st Block
Kalyana nagar, Bangalore 560043, India
Phone: +91 80 25421364
corporate@infrasupport.in www.infrasupport.in

DESIGNED	AKK
DRAWN	PHG
CHECKED	RR
DATE	Nov - 2016
SHEET	1 of 3

PROJECT: ***Preparation of Feasibility Report & Detailed Project Report for Construction of Pedestrian Subways at Two Locations in Chennai for the Chennai Metropolitan Development Authority (CMDA)***

TITLE : Elevation of Foot Over Bridge at Alandur Metro Station (Option- 1)

SCALE: NTS

DRG. NO. : IS - 1423 - HIG - AL - EL - 001

JOB NO. 1423

REVISION R7

SI NO.	DESCRIPTION	REVISION.	BY	DATE
01	R6 drawings were proof checked by IIT-M	R7	IIT-M	17/12/2015 11/08/2016

RELEASED FOR
- [ ] INFORMATION
- [ ] Draft D P R
- [ ] D P R
- [x] TENDER
- [ ] CONSTRUCTION

NOTES :

CLIENT :

CHENNAI METRO RAIL LIMITED

Admin Building, CMRL Depot, Poonamallee High Road, Koyambedu, Chennai -600107, Tamil Nadu, India.

CONSULTANT:

Infra Support
Your Complete Engineering Partner

INFRA SUPPORT ENGINEERING CONSULTANTS PVT. LTD.

An ISO 9001-2008 Certified Company

#934, 3rd Cross, HRBR Layout 1st Block
Kalyana nagar, Bangalore 560043, India
Phone: +91 80 25421364
corporate@infrasupport.in www.infrasupport.in

DESIGNED	AKK
DRAWN	PHG
CHECKED	RR
DATE	Nov - 2016
SHEET	2 of 3

PROJECT: ***Preparation of Feasibility Report & Detailed Project Report for Construction of Pedestrian Subways at Two Locations in Chennai for the Chennai Metropolitan Development Authority (CMDA)***

TITLE : Side Elevation of Foot Over Bridge at Alandur Metro Station (Option- 1)

SCALE: NTS

DRG. NO. : IS - 1423 - HIG - AL - EL - 002

JOB NO. 1423

REVISION R7

SI NO.	DESCRIPTION	REVISION.	BY	DATE
01	R6 drawings were proof checked by IIT-M	R7	IIT-M	17/12/2015 11/08/2016

RELEASED FOR
- [ ] INFORMATION
- [ ] Draft D P R
- [ ] D P R
- [x] TENDER
- [ ] CONSTRUCTION

NOTES :

CLIENT :

CHENNAI METRO RAIL LIMITED

Admin Building, CMRL Depot, Poonamallee High Road, Koyambedu, Chennai -600107, Tamil Nadu, India.

CONSULTANT:

Infra Support
Your Complete Engineering Partner

INFRA SUPPORT ENGINEERING CONSULTANTS PVT. LTD.

An ISO 9001-2008 Certified Company

#934, 3rd Cross, HRBR Layout 1st Block
Kalyana nagar, Bangalore 560043, India
Phone: +91 80 25421364
corporate@infrasupport.in www.infrasupport.in

DESIGNED	AKK	PROJECT:	***Preparation of Feasibility Report & Detailed Project Report for Construction of Pedestrian Subways at Two Locations in Chennai for the Chennai Metropolitan Development Authority (CMDA)***
DRAWN	PHG		
CHECKED	RR		
DATE	Nov - 2016	TITLE :	Elevation of Foot Over Bridge at Alandur Metro Station (Option- 2)
SHEET	3 of 3	SCALE:	NTS

DRG. NO. : IS - 1423 - HIG - AL - EL - 003

JOB NO. 1423

REVISION R7

FOOTPATH PLAN &

UTILITY PLAN DRAWINGS

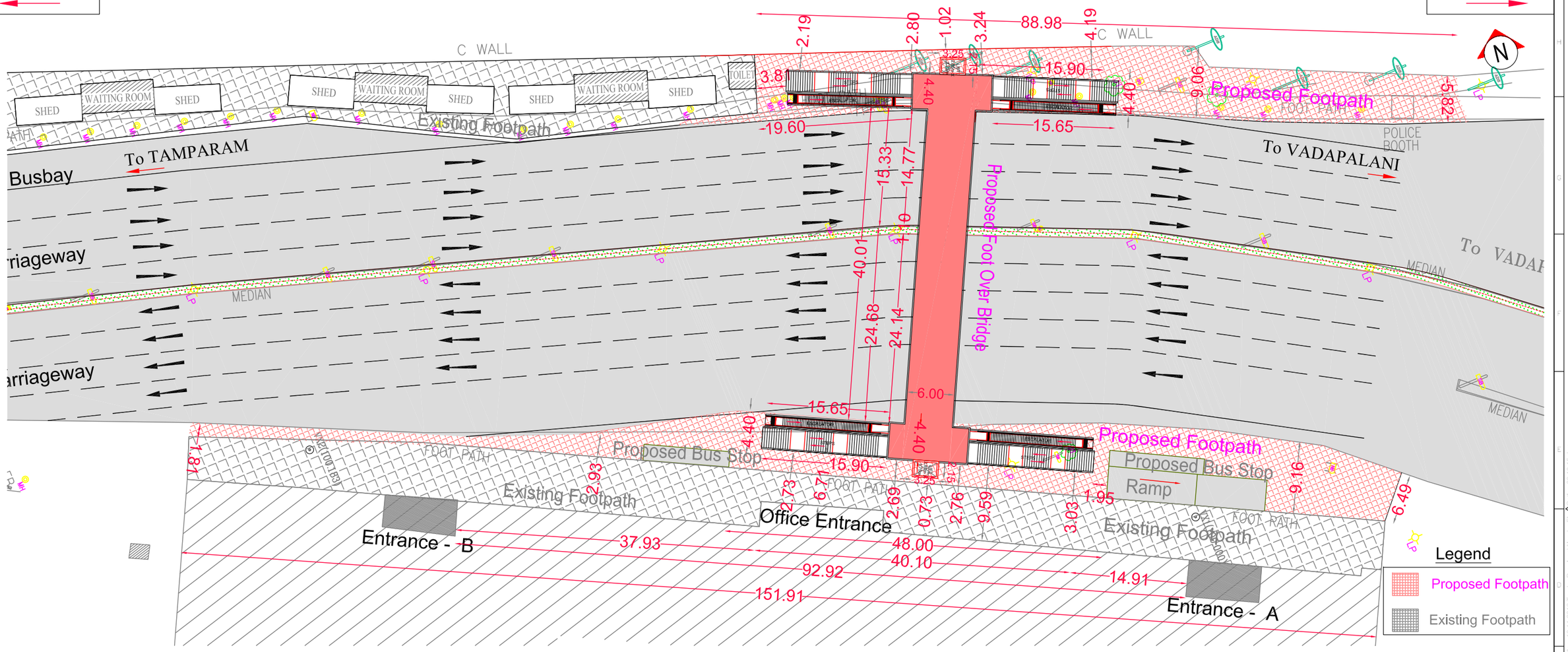

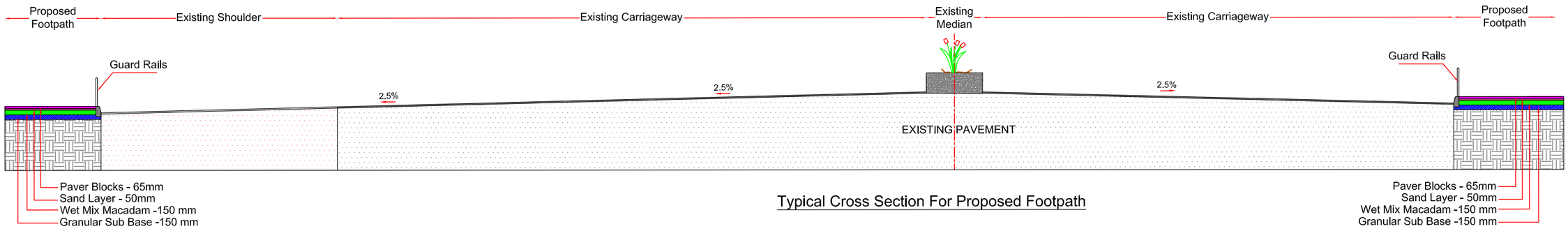

Typical Cross Section For Proposed Footpath

SI NO.	DESCRIPTION	REVISION.	BY	DATE
01	R6 drawings were proof checked by IIT-M	R7	IIT-M	17/12/2015
				11/08/2016

RELEASED FOR
- [ ] INFORMATION
- [ ] Draft D P R
- [ ] D P R
- [x] TENDER
- [ ] CONSTRUCTION

NOTES : All Dimensions are in 'm'.

CLIENT :
CHENNAI METRO RAIL LIMITED
Admin Building, CMRL Depot, Poonamallee High Road, Koyambedu, Chennai -600107, Tamil Nadu, India.

CONSULTANT:
Infra Support
Your Complete Engineering Partner
INFRA SUPPORT ENGINEERING CONSULTANTS PVT. LTD.
An ISO 9001-2008 Certified Company
#934, 3rd Cross, HRBR Layout 1st Block
Kalyana nagar, Bangalore 560043, India
Phone: +91 80 25421364
corporate@infrasupport.in www.infrasupport.in

DESIGNED	AKK
DRAWN	PHG
CHECKED	RR
DATE	Nov - 2016
SHEET	1 of 1

PROJECT: ***Preparation of Feasibility Report & Detailed Project Report for Construction of Pedestrian Subways at Two Locations in Chennai for the Chennai Metropolitan Development Authority (CMDA)***

TITLE : Plan & Cross Section of Proposed Footpath at Alandur Metro Station

SCALE: NTS

DRG. NO. : IS - 1423 - HIG - AL - PL - 001

JOB NO. 1423

REVISION R7

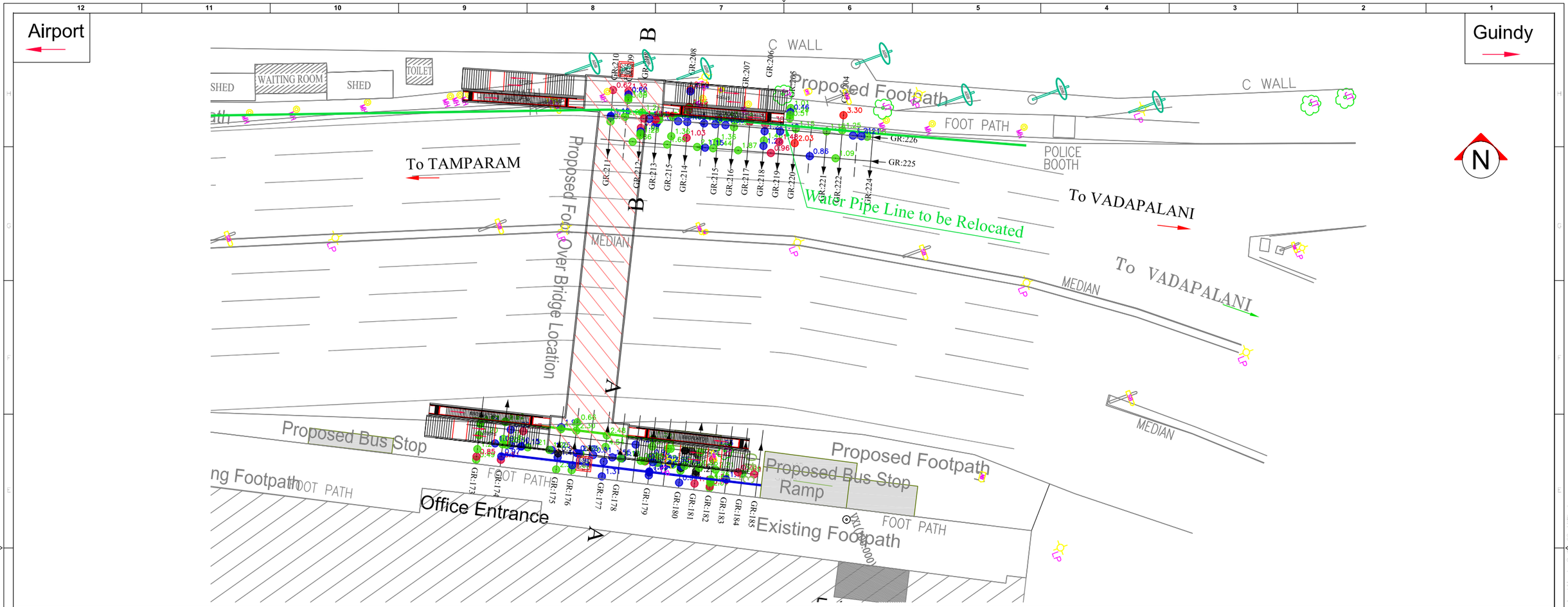

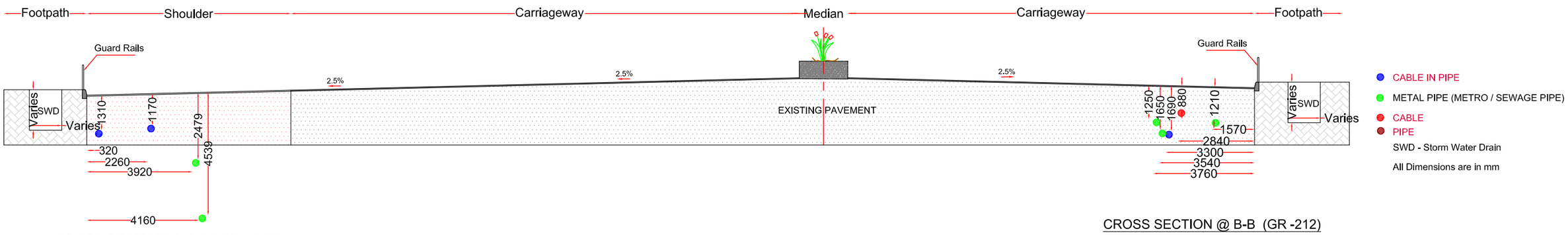

CROSS SECTION @ A-A (GR - 177)

CROSS SECTION @ B-B (GR -212)

I N D I C A T I V E O N L Y

SI NO.	DESCRIPTION	REVISION.	BY	DATE
01	R6 drawings were proof checked by IIT-M	R7	IIT-M	17/12/2015
				11/08/2016

RELEASED FOR
- [ ] INFORMATION
- [ ] Draft D P R
- [ ] D P R
- [x] TENDER
- [ ] CONSTRUCTION

NOTES :

CLIENT :
CHENNAI METRO RAIL LIMITED
Admin Building, CMRL Depot, Poonamallee High Road, Koyambedu, Chennai -600107, Tamil Nadu, India.

CONSULTANT:
Infra Support
Your Complete Engineering Partner
INFRA SUPPORT ENGINEERING CONSULTANTS PVT. LTD.
An ISO 9001-2008 Certified Company
#934, 3rd Cross, HRBR Layout 1st Block
Kalyana nagar, Bangalore 560043, India
Phone: +91 80 25421364
corporate@Infrasupport.in www.infrasupport.in

DESIGNED	AKK	PROJECT:	***Preparation of Feasibility Report & Detailed Project Report for Construction of Pedestrian Subways at Two Locations in Chennai for the Chennai Metropolitan Development Authority (CMDA)***
DRAWN	PHG		
CHECKED	RR	TITLE :	Utility Plan at Alandur Metro Station
DATE	Nov - 2016		
SHEET	1 of 1	SCALE:	NTS

DRG. NO. : IS - 1423 - HIG - UTY - 001

JOB NO. 1423

REVISION R7